1. ALL RESISTANCE VALUES ARE IN OHMS, 0.1 WATT +/- 5%.
2. ALL CAPACITANCE VALUES ARE IN MICROFARADS.
3. ALL CRYSTALS & OSCILLATOR VALUES ARE IN HERTZ.

X1782 MLB SCHEMATIC

REV	ECN	DESCRIPTION OF REVISION	CK APPD / DATE
5	0021434873	ENGINEERING RELEASED	2019-12-20

PAGE	CSA	CONTENTS	SYNC	DATE
1	1	TABLE OF CONTENTS		
2	2	SYSTEM PCB SUMMARY		
3	4	PD PARTS		
4	5	CPU GFX		
5	6	CPU MISC/JTAG/CFG/RSVD		
6	7	CPU LPDDR3 INTERFACE		
7	8	CPU & PCH POWER		
8	9	CPU & PCH GROUNDS		
9	10	CPU CORE DECOUPLING		
10	11	CPU GT DECOUPLING		
11	12	PCH DECOUPLING		
12	13	PCH AUDIO/LPC/SPI/SMBUS		
13	14	PCH POWER MANAGEMENT		
14	15	PCH PCIE/USB/CLKS		
15	16	PCH SPI/UART/GPIO		
16	18	CPU/PCH MERGED XDP		
17	19	CHIPSET SUPPORT 1		
18	20	CHIPSET SUPPORT 2		
19	22	LPDDR3 VREF MARGINING		
20	23	LPDDR3 DRAM CHANNEL A (00-31)		
21	24	LPDDR3 DRAM CHANNEL A (32-63)		
22	25	LPDDR3 DRAM CHANNEL B (00-31)		
23	26	LPDDR3 DRAM CHANNEL B (32-63)		
24	27	LPDDR3 DRAM TERMINATION		
25	28	USB-C HIGH SPEED 1		
26	29	USB-C HIGH SPEED 2		
27	30	USB-C SUPPORT		
28	31	USB-C PORT CONTROLLER A		
29	32	USB-C PORT CONTROLLER B		
30	33	USB-C CONNECTOR A		
31	36	WIFI/BT SUPPORT	J223_METE	05/14/2019
32	37	WIFI/BT MODULE 1	J223_METE	05/14/2019
33	38	WIFI/BT MODULE 2	J223_METE	05/14/2019
34	39	SOC GPIO/SEP/USB/DDR/TEST		
35	40	SOC AOP/AON/SMC		
36	41	SOC ISP/I2C/UART/SPI/I2S		
37	42	SOC PCIE		
38	43	SOC POWER 1		
39	44	SOC POWER 2		
40	45	SOC POWER 3		
41	46	SOC GROUND		
42	47	SOC SHARED SUPPORT		
43	48	SOC PROJECT SUPPORT		
44	49	T151		
45	50	SECURE ELEMENT		
46	51	T139 SUPPORT		
47	52	I2C CONNECTIONS 1		
48	53	I2C CONNECTIONS 2		
49	54	POWER SENSORS HIGH SIDE		
50	55	POWER SENSORS LOAD SIDE		
51	56	POWER SENSORS EXTENDED		
52	57	POWER SENSORS EXTENDED 2		
53	58	THERMAL SENSORS		
54	59	POWER SENSORS EXTENDED 3		
55	60	FANS/SMC/AMUX SUPPORT		
56	62	AUDIO PLACEHOLDER		
57	63	AUDIO JACK CODEC		
58	64	AUDIO LEFT AMPLIFIERS		
59	65	AUDIO RIGHT AMPLIFIERS		
60	66	AUDIO FLEX CONNECTORS		
61	67	KEYBOARD & TRACKPAD 1	X1412_SHAN	05/17/2019
62	68	KEYBOARD & TRACKPAD 2		
63	69	BATTERY CONN, 3V3 G3H RTC VR		
64	70	PBUS SUPPLY & BATTERY CHARGER		
65	71	VR CORE & SA IMVP CTRL		
66	72	VR CORE & SA IMVP		
67	74	VR GT & GTX IMVP		
68	76	VR 5V, 3V3		
69	77	VR EOPIO EDRAM		
70	78	PMIC BUCKS AND SWS		
71	79	PMIC LDOS		
72	80	PMIC GPIOS & CONTROL		
73	81	VR VDDQ VCCIO		
74	82	POWER FETS		
75	84	LCD BACKLIGHT DRIVER		
76	85	EDP DISPLAY CONNECTOR		
77	86	S4E<0>		
78	87	S4E<1>		
79	88	S4E<2>		
80	89	S4E<3>		
81	90	OCARINA PMIC & NAND VCC VR & VDDIO1 SWCH		
82	96	SSD SUPPORT		
83	124	FCT		
84	125	PROBE POINTS		
85	135	DESENSE 1		
86	136	DESENSE 2		
87	137	DESENSE 3		
88	138	DESENSE 4		
89	140	DEV SUPPORT 1		
90	141	DEV SUPPORT 2		
91	400	BOM CONFIGURATION		
92	401	BOM CONFIGURATION		
93	403	BOM GROUPS		
94	405	BOM VARIANT TABLES		
95	406	BOM VARIANT TABLES		
96	407	BOM VARIANT TABLES		
97	410	BOM ALTERNATES		
98	500	BOARD RULES		

LAST_MODIFICATION=Mon Dec 16 17:32:55 2019

DRAWING TITLE: SCHEM,MLB,X1782

Apple Inc.

DRAWING NUMBER: 051-05309 SIZE: D

REVISION: 5.1.0

BRANCH:

PAGE: 1 OF 500

SHEET: 1 OF 98

NOTICE OF PROPRIETARY PROPERTY:

THE INFORMATION CONTAINED HEREIN IS THE PROPRIETARY PROPERTY OF APPLE INC. THE POSESSOR AGREES TO THE FOLLOWING:
I TO MAINTAIN THIS DOCUMENT IN CONFIDENCE
II NOT TO REPRODUCE OR COPY IT
III NOT TO REVEAL OR PUBLISH IT IN WHOLE OR PART
IV ALL RIGHTS RESERVED

www.haojiyoubbs.com
QQ微信：181806465

DESIGN	DESCRIPTION	SCHEMATIC	BOARD	MCO	PANEL
J223/MLB	POR CFL MLB	051-05309	820-01987	056-09380	057-01595-D
J213/FLEX_AUDIOJACK	AUDIO JACK, AMR, AND MESA	051-04122	821-02091	056-07548-27	N/A
J680/FLEX_USBC	LEFT SIDE USB TONGUE FLEX	051-03140	821-01646	056-05483-A	N/A
J130/FLEX_BMU_SIGNAL	SIGNALS TO BMU	051-01247	821-01726	056-05589-A	N/A
J130/FLEX_BMU_PWR	POWER TO/FROM BMU	051-01195	821-00583	056-02919-A	N/A
J130/FLEX_TCON_MLB_A	DISPLAYPORT FROM MLB TO TCON	051-01897	821-00981	056-02852-A	N/A
J213/FLEX_TRACKPAD	MLB TO TRACKPAD	051-04335	821-02218	056-07655-08	N/A
J130/FLEX_KB	KB FLEX FOR ALL 3 KB TYPES	051-02011	821-01046	056-03725-B	N/A
J213/FLEX_3MIC	MIC FLEX	051-04441	821-02265	056-07754-24	N/A
J79/GRAPE_FLEX	DFR TOUCH FLEX	051-01338	821-00681	056-02220-A	N/A
DFR DAUGHTER FLEX	DFR DAUGHTER FLEX	VENDOR	VENDOR	099-14398	N/A

PAGE TITLE
SYSTEM PCB SUMMARY

Apple Inc.

DRAWING NUMBER 051-05309
SIZE D
REVISION 5.1.0
BRANCH
PAGE 2 OF 500
SHEET 2 OF 98

NOTICE OF PROPRIETARY PROPERTY:
THE INFORMATION CONTAINED HEREIN IS THE PROPRIETARY PROPERTY OF APPLE INC.
THE POSESSOR AGREES TO THE FOLLOWING:
I TO MAINTAIN THIS DOCUMENT IN CONFIDENCE
II NOT TO REPRODUCE OR COPY IT
III NOT TO REVEAL OR PUBLISH IT IN WHOLE OR PART
IV ALL RIGHTS RESERVED

www.haojiyoubbs.com
QQ微信：181806465

TOP SIDE STANDOFFS

OMIT_TABLE
Z0400
2.80D1.2ID-1.49H-SM
CRITICAL
860-01216
EAST OF NAND ALIGNED WITH BOTTOM SIDE STANDOFF

OMIT_TABLE
Z0401
2.80D1.2ID-1.49H-SM
CRITICAL
860-01216
NORTH OF NAND

OMIT_TABLE
Z0402
2.80D1.2ID-1.49H-SM
CRITICAL
860-01216
NORTH OF NAND

OMIT_TABLE
Z0404
2.80D1.2ID-1.49H-SM
CRITICAL
860-01216
FAR SIDE NEAR AJ CONN

OMIT_TABLE
Z0405
2.80D1.2ID-1.49H-SM
CRITICAL
860-01216
SOUTH OF NAND

OMIT_TABLE
Z0406
2.80D1.2ID-1.49H-SM
CRITICAL
860-01216
NORTH OF NAND

BOTTOM SIDE TALL STANDOFF

OMIT_TABLE
Z0460
2.80D1.2ID-3.15H-SM
860-01485
EAST OF NAND ALIGNED WITH TOP SIDE STANDOFF

POGO PIN HEAT PIPE

CRITICAL
PP0499
POGO-2.30D-4.0H-SM
SM-1
870-09667

USB-C BOSS

CRITICAL
Z0420
3.40D1.75ID-1.12H-SM
860-00392

CRITICAL
Z0421
3.40D1.75ID-1.12H-SM
860-00392

DFR BOSS

CRITICAL
Z0430
3.40D1.75ID-1.5H-SM
860-01484

TRACKPAD BOSS

CRITICAL
Z0440
3.50D1.85ID-1.41H-SM
860-00381

CRITICAL
Z0441
3.50D1.85ID-1.41H-SM
860-00381

DISPLAY BOSS

CRITICAL
Z0450
2.7X1.8R-1.4ID-0.91H-SM
860-00469

CRITICAL
Z0451
2.7X1.8R-1.4ID-0.91H-SM
860-00469

AJ FLEX COWLING BOSS

CRITICAL
Z0470
3.50D1.85ID-1.92H-SM
860-00382

DFR WASHER

CRITICAL
Z0431
4.750D2.73ID-H0.2
RING-TH
860-01519

WIFI WASHER

CRITICAL
Z0432
4.750D2.73ID-H0.2
RING-TH
860-01519

POGO PIN FAN

CRITICAL
PP0430
POGO-2.30D-4.0H-SM
SM-1
870-09667

SHIELD CAN ALIGMENT HOLES

CRITICAL
ZT0441
TH-NSP
SL-1.2X0.4-1.5X0.7
998-04440

CRITICAL
ZT0442
TH-NSP
SL-1.2X0.4-1.5X0.7
998-04440

CRITICAL
ZT0443
TH-NSP
SL-1.2X0.4-1.5X0.7
998-04440

CRITICAL
ZT0444
TH-NSP
SL-1.2X0.4-1.5X0.7
998-04440

CRITICAL
ZT0445
TH-NSP
SL-1.2X0.4-1.5X0.7
998-04440

CRITICAL
ZT0446
TH-NSP
SL-1.2X0.4-1.5X0.7
998-04440

POGO PINS BACKLIGHT

CRITICAL
PP0400
POGO-2.30D-4.06H-SM
SM-1
870-09670

POGO PIN DISPLAY

CRITICAL
PP0420
POGO-2.30D-4.0H-SM
SM-1
870-09667

POGO PINS DRAM

CRITICAL
PP0410
POGO-2.30D-4.0H-SM
SM-1
870-09667

CRITICAL
PP0411
POGO-2.30D-4.0H-SM
SM-1
870-09667

MLB MTG HOLES 2.1X3.36 MM

CRITICAL
ZT0420
TH-NSP
SL-2.1X3.51-4.6X6.01
998-19711
NEAR RIGHT SPKR CONNECTOR

CRITICAL
ZT0421
TH-NSP
SL-2.1X3.51-4.6X6.01
998-19711
NEAR TRACKPAD CONNECTOR

CRITICAL
ZT0422
TH-NSP
SL-2.1X3.51-4.6X6.01
998-19711
NEAR LEFT SPKR CONNECTOR

CPU THERM STAGE HOLES 3.15 MM

CRITICAL
ZT0400
3P9R3P15
998-0845
CORNER NEAREST KEYBOARD

CPU THERM STAGE HOLES 3.6 MM

CRITICAL
ZT0401
4.0R3.6-NSP
998-03850

CRITICAL
ZT0402
4.0R3.6-NSP
998-03850

CRITICAL
ZT0403
4.0R3.6-NSP
998-03850

FAN MTG HOLE 2.0X2.6 MM

CRITICAL
ZT0430
TH-NSP
SL-2.6X2.0-4.7X4.1
998-03974

SHIELD CAN ALIGNMENT SLOTS DRAM

CRITICAL
SL0490
TH-NSP
SL-1.2X0.4-1.5X0.7
998-04440

CRITICAL
SL0491
TH-NSP
SL-1.2X0.4-1.5X0.7
998-04440

2X PLATED SLOTS IN MEM AREA DUE TO SPACE CONSTRAINTS <RDAR://44382678> ALL OTHER SHIELD ALIGNMENT SLOTS ARE NPTH + GND RING FOR BETTER TOLERANCE

NOTE: REFER TO BOM TABLES. ONLY SOLDERED PARTS REMAIN IN RAMP/PVT SMT BOM. OTHERS MOVED TO POST-SMT ENCLOSURE BOM

USB-C SHIELD

806-19049	1	SHIELD CAN,HOLES,TITAN RIDGE,X1533	USBC_CAN	CRITICAL	USBC_SHLD
870-08656	1	TAPE,NON COND,STIFFENER,TITAN RIDGE,CAN,X1533	USBC_CAN_TAPE	CRITICAL	USBC_TAPE

MEGA SHIELD

604-25986	1	MEGA CAN,INSULATED,X1533	MEGA_CAN	CRITICAL	MEGA_SHLD

DRAM SHIELD TOP

806-18560	1	FENCE,DRAM,UNIV,X1533	DRAM_TOP_FENCE	CRITICAL	DRAM_TOP_FENC
870-07840	1	TAPE,COND,DRAM,UNIV,X1533	DRAM_TOP_FENCE_TAPE	CRITICAL	DRAM_TOP_TAPE

DRAM SHIELD BOTTOM

806-19048	1	SHIELD CAN,HOLES,DRAM,UNIV,X1533	DRAM_BOT_CAN	CRITICAL	DRAM_BOT_CAN
870-08657	1	TAPE,NON COND,STIFFENER,DRAM,CAN	DRAM_BOT_CAN_TAPE	CRITICAL	DRAM_BOT_TAPE

LIQUID SPILL INDICATOR

825-00493	4	LSI,BLACK,REEL,X1030	LSI1,LSI2,LSI3,LSI4	CRITICAL	LSI

CPU SLEDS

806-14839	2	SLED,METAL,MATT NICKEL,X940	SLED1,SLED2	CRITICAL	CPU_SLEDS

TOP SIDE STANDOFFS

860-01216	6	BOSS,STANDOFF,MLB,X1533	Z0400-Z0402,Z0404-Z0406	CRITICAL	STANDOFFS_TOP

BOTTOM SIDE STANDOFFS

860-01485	1	BOSS,STANDOFF,MLB,TALL,X1533	Z0460	CRITICAL	STANDOFFS_BOT

BOM_COST_GROUP=MECHANICALS

SYNC_MASTER= SYNC_DATE=

PAGE TITLE
PD PARTS

Apple Inc.

DRAWING NUMBER 051-05309
SIZE D
REVISION 5.1.0
BRANCH
PAGE 4 OF 500
SHEET 3 OF 98

NOTICE OF PROPRIETARY PROPERTY:
THE INFORMATION CONTAINED HEREIN IS THE PROPRIETARY PROPERTY OF APPLE INC.
THE POSESSOR AGREES TO THE FOLLOWING:
I TO MAINTAIN THIS DOCUMENT IN CONFIDENCE
II NOT TO REPRODUCE OR COPY IT
III NOT TO REVEAL OR PUBLISH IT IN WHOLE OR PART
IV ALL RIGHTS RESERVED

www.haojiyoubbs.com
QQ微信：181806465

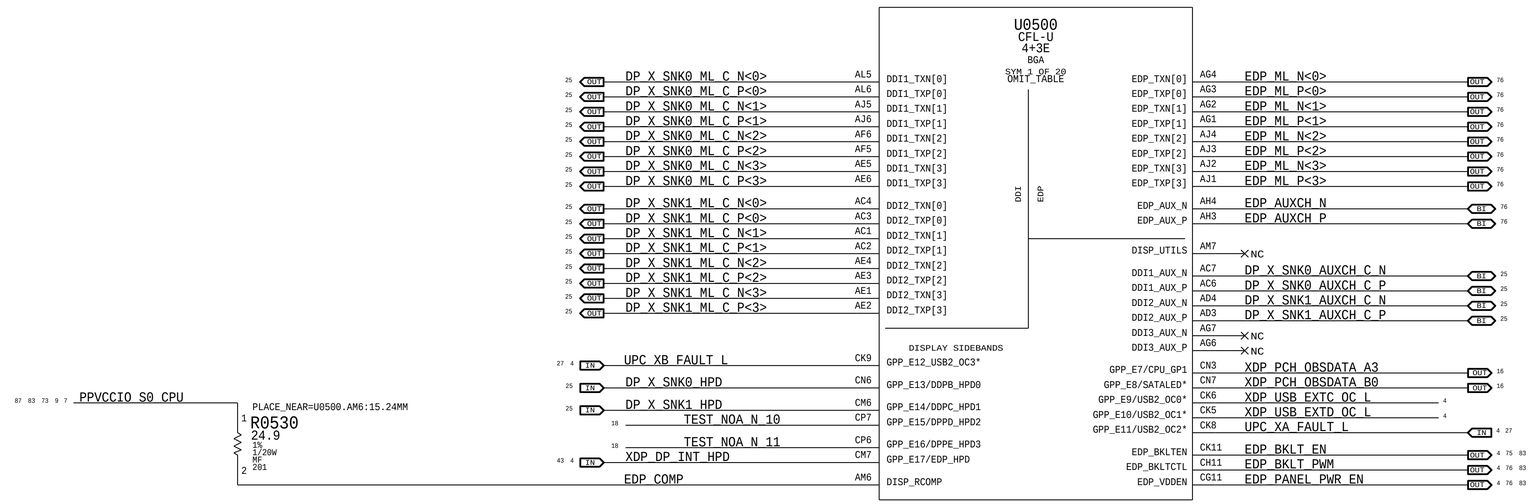

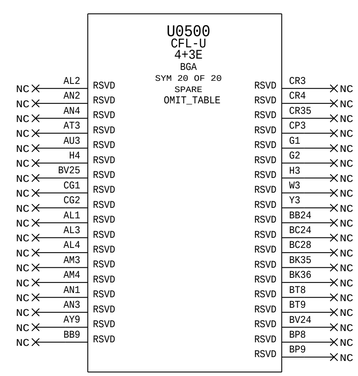

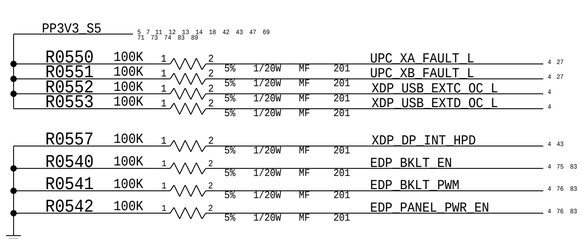

BOM_COST_GROUP=CPU & CHIPSET

PAGE TITLE
CPU GFX

Apple Inc.

DRAWING NUMBER 051-05309 SIZE D
REVISION 5.1.0
BRANCH
PAGE 5 OF 500
SHEET 4 OF 98

NOTICE OF PROPRIETARY PROPERTY:
THE INFORMATION CONTAINED HEREIN IS THE PROPRIETARY PROPERTY OF APPLE INC.
THE POSESSOR AGREES TO THE FOLLOWING:
I TO MAINTAIN THIS DOCUMENT IN CONFIDENCE
II NOT TO REPRODUCE OR COPY IT
III NOT TO REVEAL OR PUBLISH IT IN WHOLE OR PART
IV ALL RIGHTS RESERVED

www.haojiyoubbs.com
QQ微信：181806465

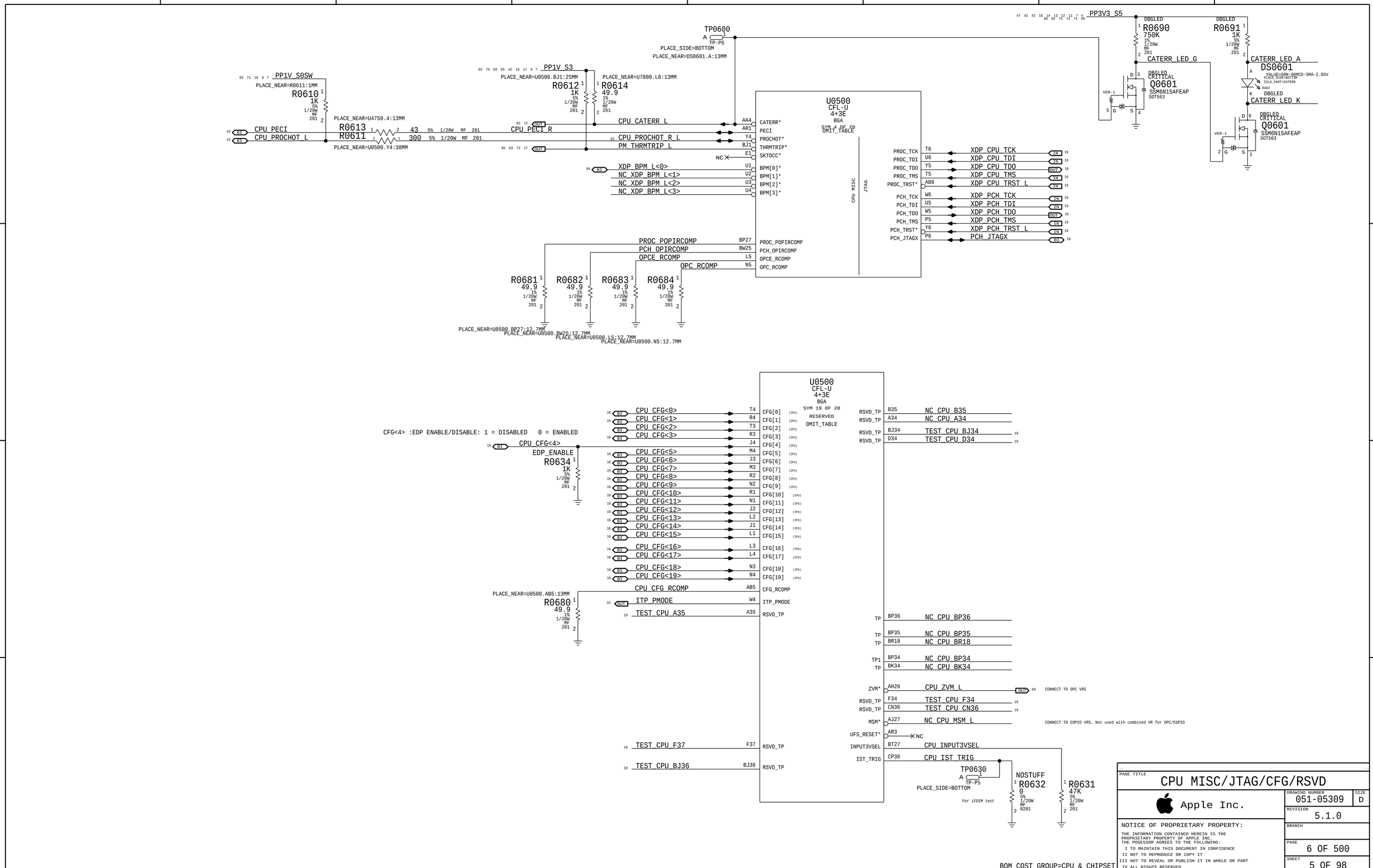

www.haojiyoubbs.com
QQ微信：181806465

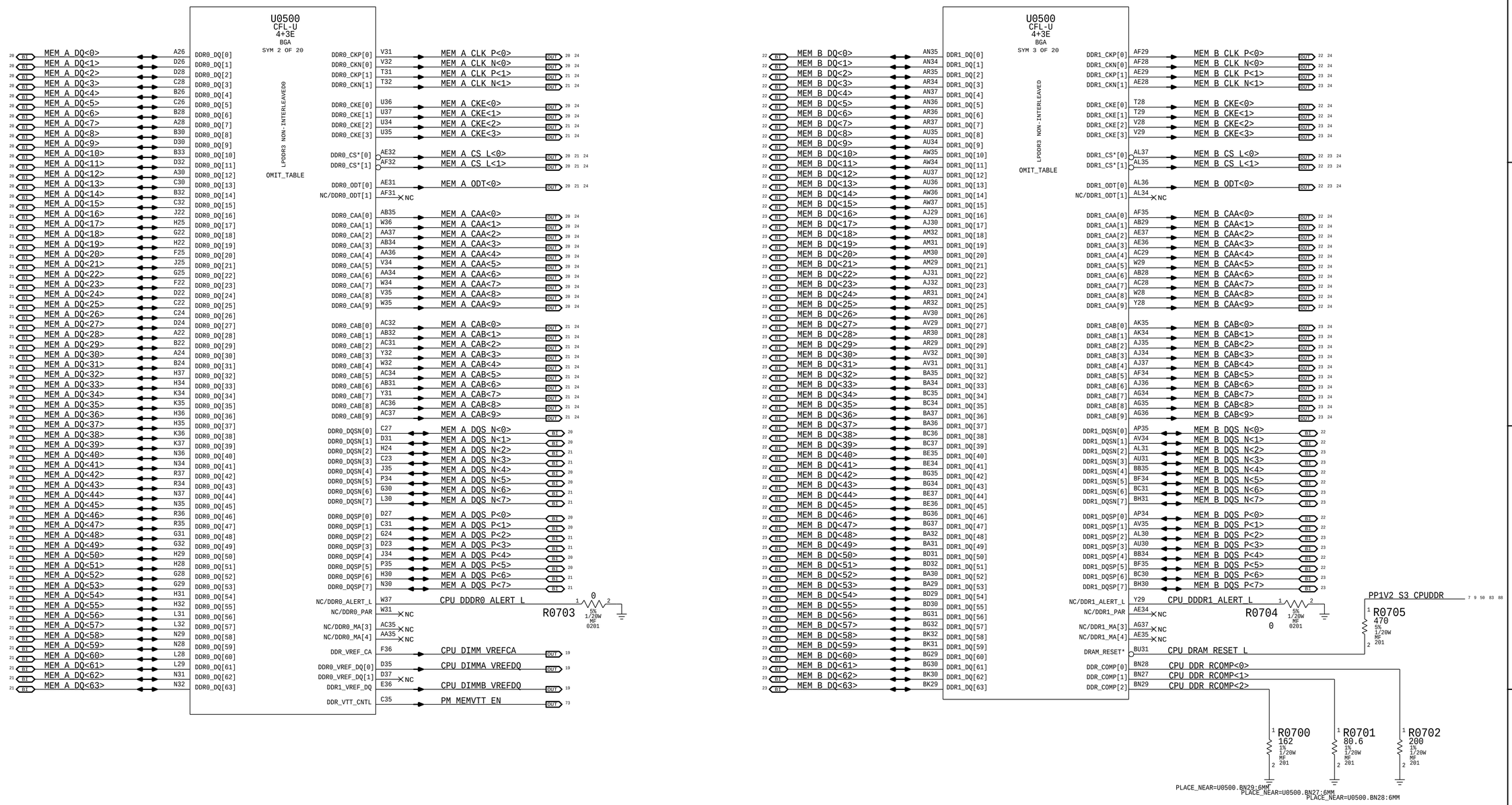

BOM_COST_GROUP=CPU & CHIPSET

PAGE TITLE
CPU LPDDR3 INTERFACE

Apple Inc.

DRAWING NUMBER 051-05309 | SIZE D
REVISION 5.1.0
BRANCH
PAGE 7 OF 500
SHEET 6 OF 98

NOTICE OF PROPRIETARY PROPERTY:
THE INFORMATION CONTAINED HEREIN IS THE PROPRIETARY PROPERTY OF APPLE INC.
THE POSESSOR AGREES TO THE FOLLOWING:
I TO MAINTAIN THIS DOCUMENT IN CONFIDENCE
II NOT TO REPRODUCE OR COPY IT
III NOT TO REVEAL OR PUBLISH IT IN WHOLE OR PART
IV ALL RIGHTS RESERVED

www.haojiyoubbs.com
QQ微信：181806465

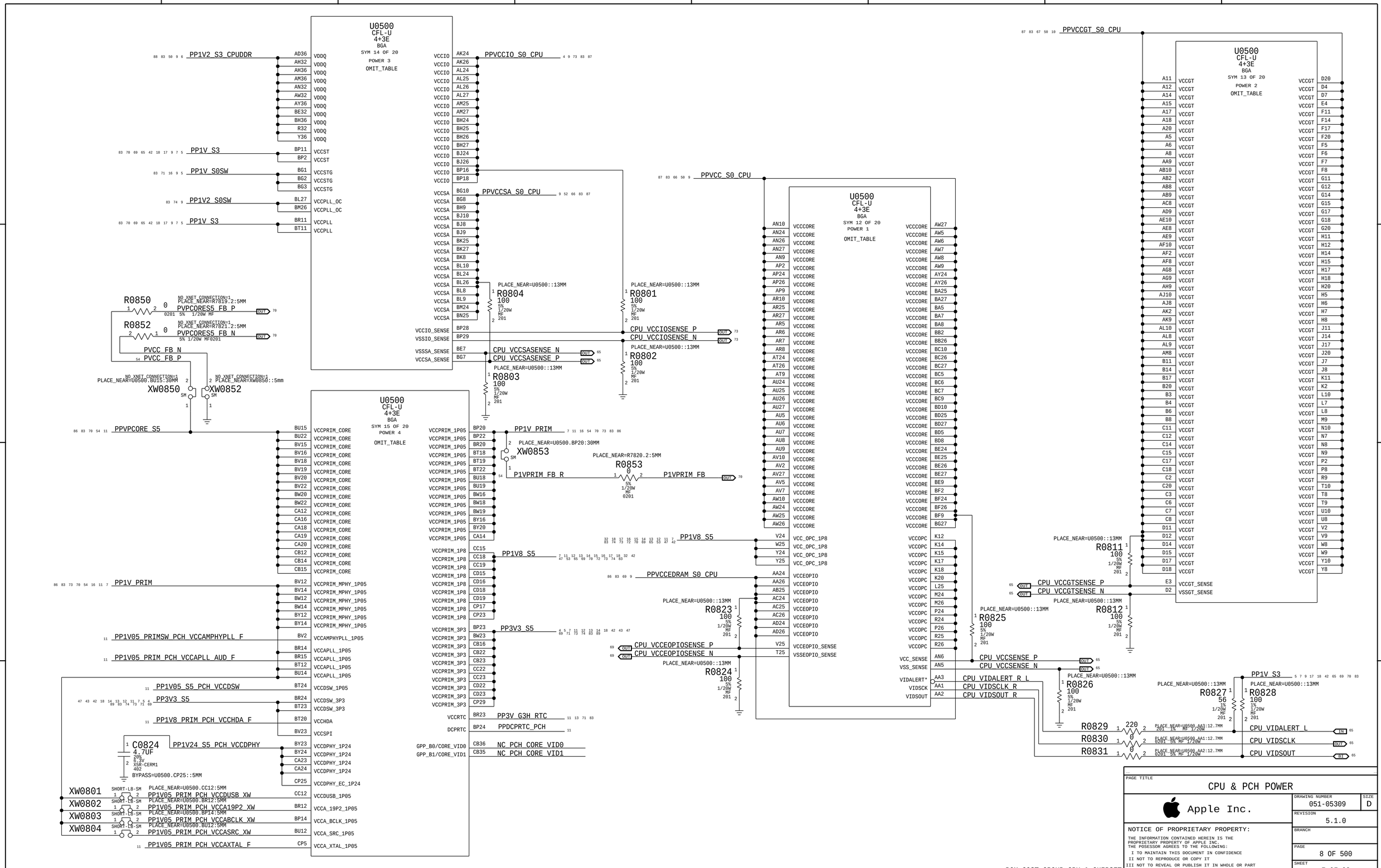

PAGE TITLE	CPU & PCH POWER
Apple Inc.	DRAWING NUMBER 051-05309
	SIZE D
	REVISION 5.1.0
	BRANCH
	PAGE 8 OF 500
	SHEET 7 OF 98

NOTICE OF PROPRIETARY PROPERTY:
THE INFORMATION CONTAINED HEREIN IS THE PROPRIETARY PROPERTY OF APPLE INC.
THE POSESSOR AGREES TO THE FOLLOWING:
I TO MAINTAIN THIS DOCUMENT IN CONFIDENCE
II NOT TO REPRODUCE OR COPY IT
III NOT TO REVEAL OR PUBLISH IT IN WHOLE OR PART
IV ALL RIGHTS RESERVED

BOM_COST_GROUP=CPU & CHIPSET

www.haojiyoubbs.com
QQ微信：181806465

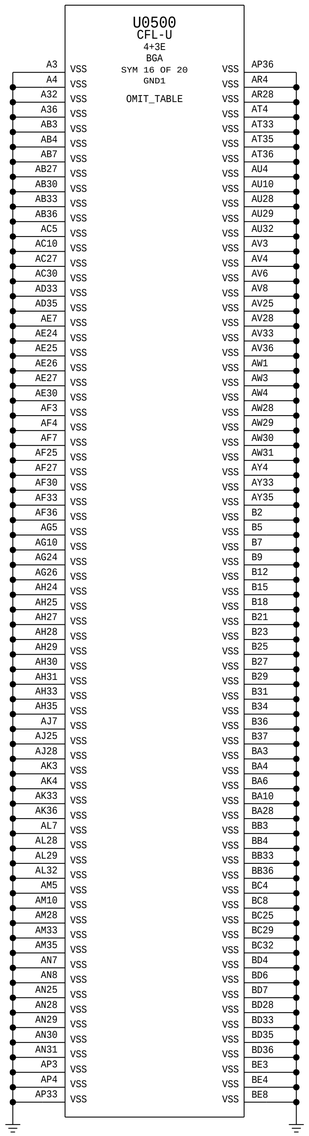

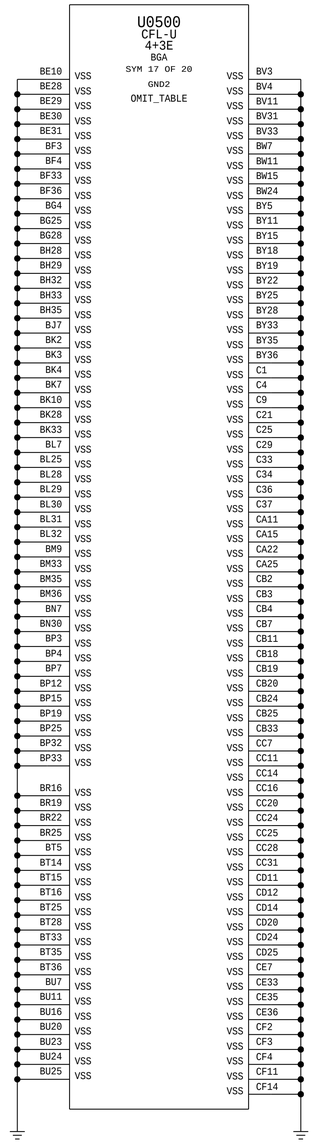

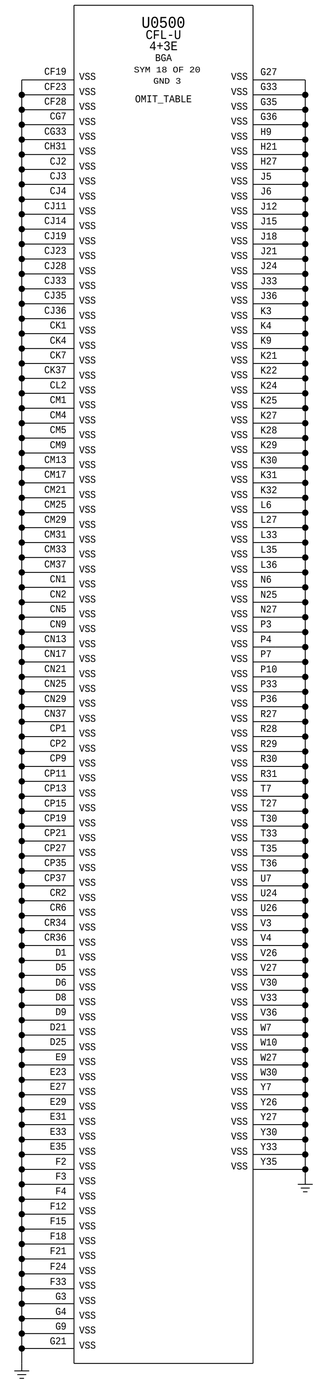

BOM_COST_GROUP=CPU & CHIPSET

PAGE TITLE	CPU & PCH Grounds
Apple Inc.	DRAWING NUMBER 051-05309 / SIZE D
	REVISION 5.1.0
	BRANCH
	PAGE 9 OF 500
	SHEET 8 OF 98

NOTICE OF PROPRIETARY PROPERTY:
THE INFORMATION CONTAINED HEREIN IS THE PROPRIETARY PROPERTY OF APPLE INC.
THE POSESSOR AGREES TO THE FOLLOWING:
I TO MAINTAIN THIS DOCUMENT IN CONFIDENCE
II NOT TO REPRODUCE OR COPY IT
III NOT TO REVEAL OR PUBLISH IT IN WHOLE OR PART
IV ALL RIGHTS RESERVED

www.haojiyoubbs.com
QQ微信：181806465

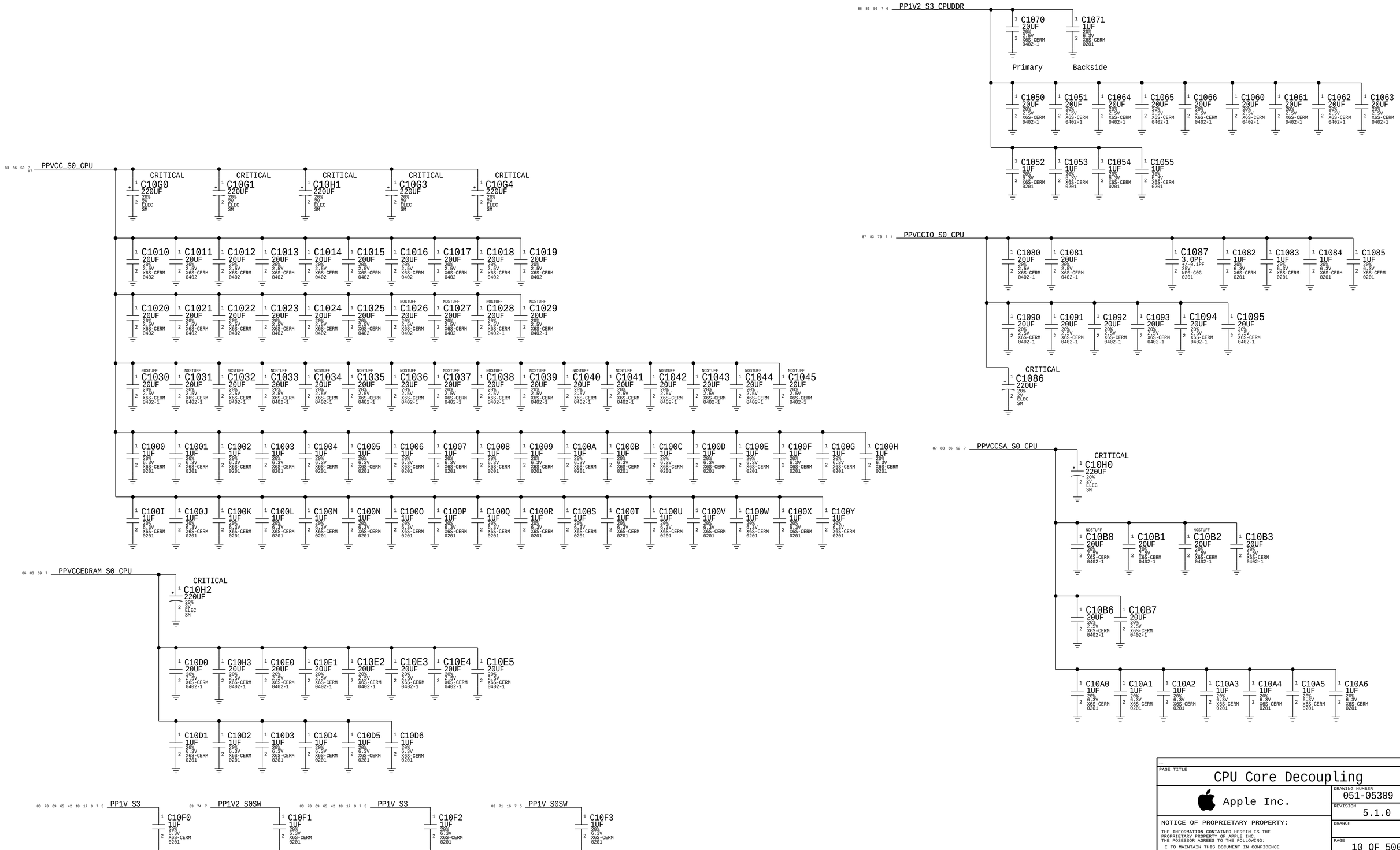

PAGE TITLE

CPU Core Decoupling

Apple Inc.

DRAWING NUMBER 051-05309 SIZE D

REVISION 5.1.0

BRANCH

PAGE 10 OF 500

SHEET 9 OF 98

NOTICE OF PROPRIETARY PROPERTY:

THE INFORMATION CONTAINED HEREIN IS THE PROPRIETARY PROPERTY OF APPLE INC.
THE POSESSOR AGREES TO THE FOLLOWING:
I TO MAINTAIN THIS DOCUMENT IN CONFIDENCE
II NOT TO REPRODUCE OR COPY IT
III NOT TO REVEAL OR PUBLISH IT IN WHOLE OR PART
IV ALL RIGHTS RESERVED

www.haojiyoubbs.com
QQ微信：181806465

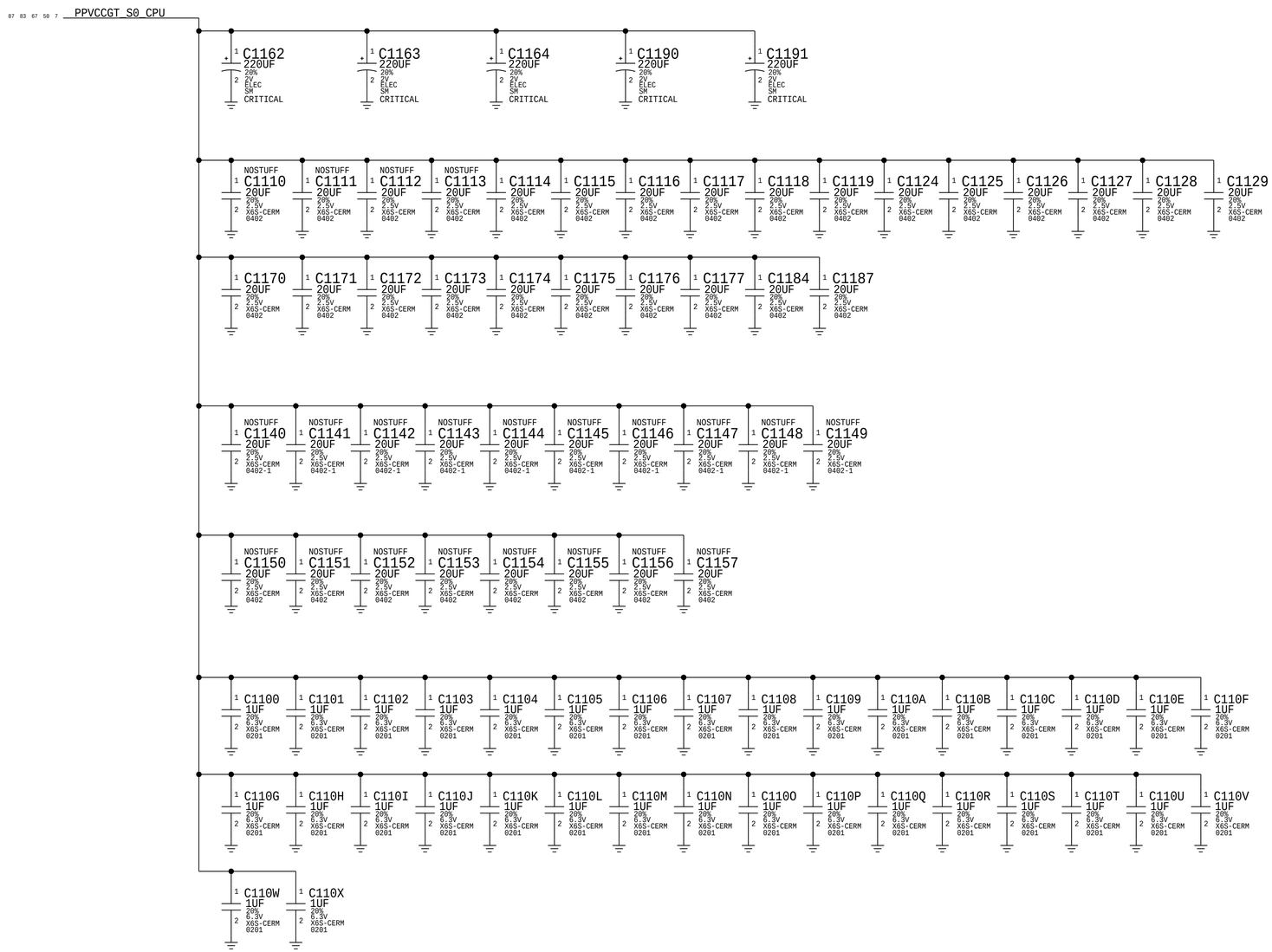

BOM_COST_GROUP=CPU & CHIPSET

PAGE TITLE	CPU GT Decoupling
Apple Inc.	DRAWING NUMBER 051-05309 / SIZE D
	REVISION 5.1.0
	BRANCH
	PAGE 11 OF 500
	SHEET 10 OF 98

NOTICE OF PROPRIETARY PROPERTY:
THE INFORMATION CONTAINED HEREIN IS THE PROPRIETARY PROPERTY OF APPLE INC.
THE POSESSOR AGREES TO THE FOLLOWING:
I TO MAINTAIN THIS DOCUMENT IN CONFIDENCE
II NOT TO REPRODUCE OR COPY IT
III NOT TO REVEAL OR PUBLISH IT IN WHOLE OR PART
IV ALL RIGHTS RESERVED

www.haojiyoubbs.com
QQ微信：181806465

FILTERS

RAIL SIDE | PCH SIDE

PPVPCORE_S5 — NOSTUFF C1200 1UF 20% 6.3V X6S-CERM 0201 — BYPASS=U0500.BV18::3MM

PP3V3_S5 — NOSTUFF C1221 1UF 20% 6.3V X6S-CERM 0201 — BYPASS=U0500.BR24::3MM

PP1V8_S5 — L1260 220-OHM-0.7A-0.28-OHM 0402-1 U0500.BT20::10mm
- C1265 3.0PF +/-0.1PF 25V NP0-C0G 0201
- C1226 2.0PF +/-0.1PF 25V C0G-CERM 0201
- C1260 4.7UF 20% 6.3V X5R-CERM1 402 — BYPASS=U0500.BT20::10MM
- BYPASS=U0500.BT20::10mm

MIN_LINE_WIDTH=0.2000 MIN_NECK_WIDTH=0.1000 PP1V8_PRIM_PCH_VCCHDA_F

PP1V_PRIM — C1201 1UF 20% 6.3V X6S-CERM 0201 — BYPASS=U0500.BP20::3MM

PP1V05_S5_PCH_VCCDSW (MIN_LINE_WIDTH=0.2000, MIN_NECK_WIDTH=0.1000) — C1232 1UF 20% 6.3V X6S-CERM 0201 — BYPASS=U0500.BT24::3MM

PP1V_PRIM — L1261 220-OHM-0.7A-0.28-OHM 0402-1 U0500.BR15::3mm
- C1267 3.0PF +/-0.1PF 25V NP0-C0G 0201
- C1262 2.0PF +/-0.1PF 25V C0G-CERM 0201
- C1261 4.7UF 20% 6.3V X5R-CERM1 402 — BYPASS=U0500.BR15::3MM
- BYPASS=U0500.BR15::3mm

MIN_LINE_WIDTH=0.2000 MIN_NECK_WIDTH=0.1000 PP1V05_PRIM_PCH_VCCAPLL_AUD_F

PP1V_PRIM — CRITICAL C1203 20UF 20% 6.3V CERM-X5R 0402 — BYPASS=U0500.BV12::12MM

PP3V_G3H_RTC — C1227 1UF 20% 6.3V X6S-CERM 0201 — BYPASS=U0500.BR23::3MM; C1228 0.1UF 10% 16V X5R-CERM 0201 — BYPASS=U0500.BR23::3MM

PP1V8_S5 — C1205 1UF 20% 6.3V X6S-CERM 0201; NOSTUFF C1206 1UF 20% 6.3V X6S-CERM 0201 — BYPASS=U0500.CP23::3MM — BYPASS=U0500.CP17::3MM

PPDCPRTC_PCH (MIN_LINE_WIDTH=0.2000, MIN_NECK_WIDTH=0.1000) — C1231 0.1UF 10% 16V X5R-CERM 0201 — BYPASS=U0500.BP24::3MM

PP1V_PRIM — R1250 0 5% 1/10W MF-LF 402
- CRITICAL C1250 20UF 20% 6.3V CERM-X5R 0402
- CRITICAL C1251 20UF 20% 6.3V CERM-X5R 0402 — BYPASS=U0500.BV2::4MM
- C1252 1UF 20% 6.3V X6S-CERM 0201 — BYPASS=U0500.BV2::3MM
- BYPASS=U0500.BV2::5MM

MIN_LINE_WIDTH=0.2000 MIN_NECK_WIDTH=0.1000 PP1V05_PRIMSW_PCH_VCCAMPHYPLL_F

PP3V3_S5 — C1207 3.0PF +/-0.1PF 25V NP0-C0G 0201; NOSTUFF C1208 0.1UF 10% 16V X5R-CERM 0201 — BYPASS=U0500.CP29::3MM — BYPASS=U0500.CD23::7MM

PP1V_PRIM — R1253 0 5% 1/10W MF-LF 402
- CRITICAL C1253 20UF 20% 6.3V CERM-X5R 0402
- CRITICAL C1254 20UF 20% 6.3V CERM-X5R 0402 — BYPASS=U0500.CP5::3MM
- C1255 1UF 20% 6.3V X6S-CERM 0201 — BYPASS=U0500.CP5::3MM
- BYPASS=U0500.CP5::3MM

MIN_LINE_WIDTH=0.2000 MIN_NECK_WIDTH=0.1000 PP1V05_PRIM_PCH_VCCAXTAL_F

BOM_COST_GROUP=CPU & CHIPSET

PAGE TITLE	PCH Decoupling
	Apple Inc.
DRAWING NUMBER	051-05309
SIZE	D
REVISION	5.1.0
BRANCH	
PAGE	12 OF 500
SHEET	11 OF 98

NOTICE OF PROPRIETARY PROPERTY:
THE INFORMATION CONTAINED HEREIN IS THE PROPRIETARY PROPERTY OF APPLE INC.
THE POSESSOR AGREES TO THE FOLLOWING:
I TO MAINTAIN THIS DOCUMENT IN CONFIDENCE
II NOT TO REPRODUCE OR COPY IT
III NOT TO REVEAL OR PUBLISH IT IN WHOLE OR PART
IV ALL RIGHTS RESERVED

www.haojiyoubbs.com
QQ微信：181806465

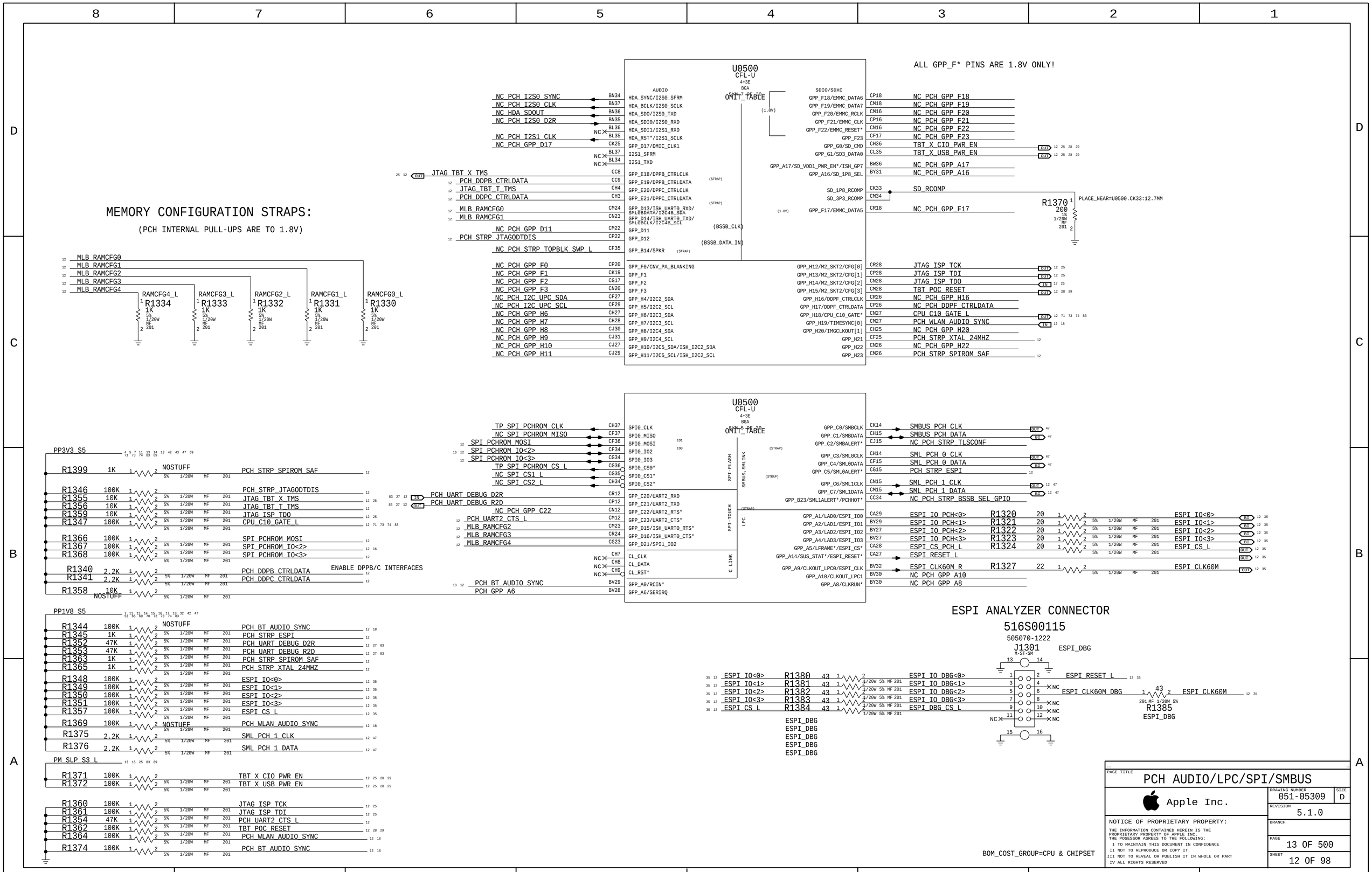

www.haojiyoubbs.com
QQ微信：181806465

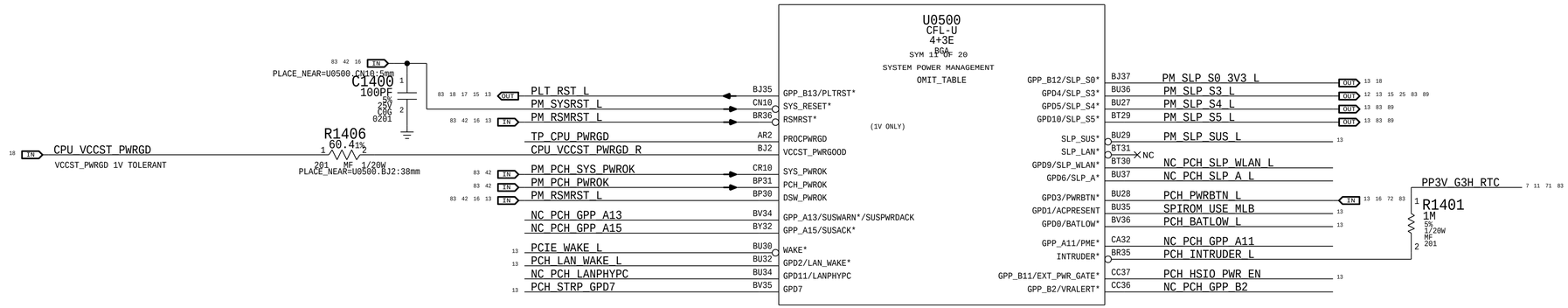

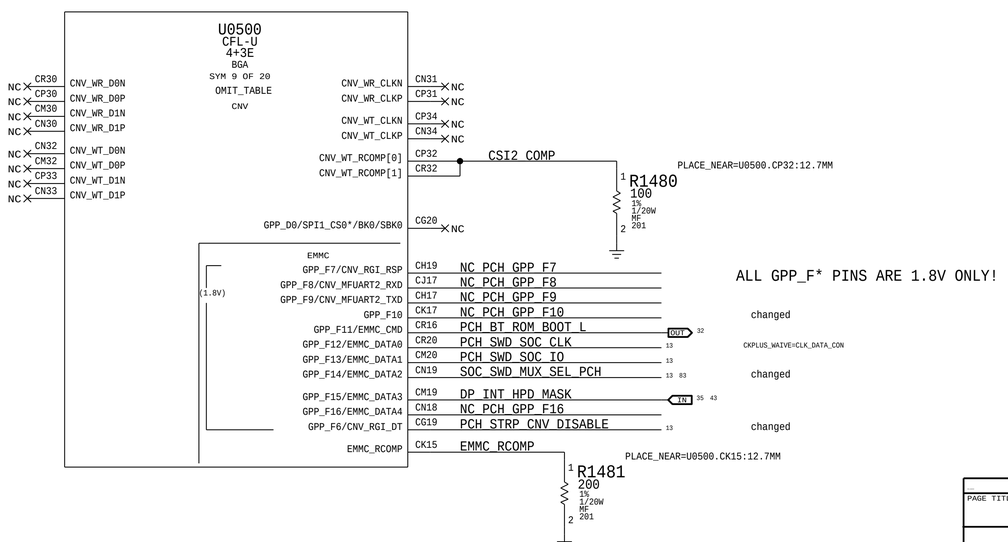

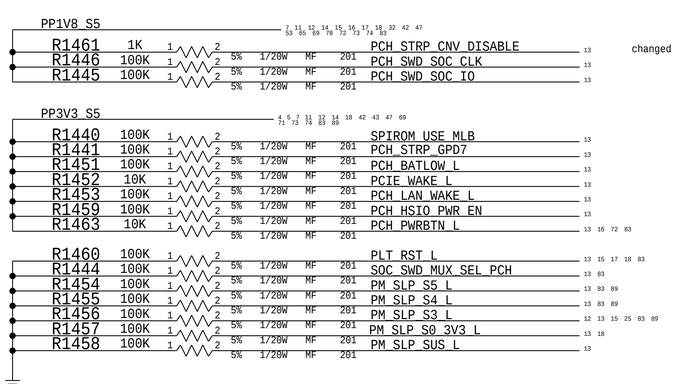

NOTE: =PM_SLP_S0_L HAS INTERNAL PULL-UP BEFORE RSMRST_L IS RELEASED.
THIS CAUSES A VOLTAGE DIVIDER WITH THE PULL-DOWN HERE.
THE SIGNAL IS DRIVEN HI AFTER RSMRST_L IS RELEASED.

BOM_COST_GROUP=CPU & CHIPSET

PAGE TITLE
PCH POWER MANAGEMENT

Apple Inc.

DRAWING NUMBER 051-05309 SIZE D
REVISION 5.1.0
BRANCH
PAGE 14 OF 500
SHEET 13 OF 98

NOTICE OF PROPRIETARY PROPERTY:
THE INFORMATION CONTAINED HEREIN IS THE PROPRIETARY PROPERTY OF APPLE INC.
THE POSESSOR AGREES TO THE FOLLOWING:
I TO MAINTAIN THIS DOCUMENT IN CONFIDENCE
II NOT TO REPRODUCE OR COPY IT
III NOT TO REVEAL OR PUBLISH IT IN WHOLE OR PART
IV ALL RIGHTS RESERVED

www.haojiyoubbs.com
QQ微信：181806465

U0500
CFL-U
4+3E
BGA
SYM 8 OF 20
OMIT_TABLE

Net	Pin	Signal	Dir	Pin	Net	Group
USB3_BSSB_D2R_N	CB5	PCIE1_RXN/USB31_1_RXN	IN	27		EXT A (SS,DCI)
USB3_BSSB_D2R_P	CB6	PCIE1_RXP/USB31_1_RXP	IN	27		
USB3_BSSB_R2D_C_N	CA4	PCIE1_TXN/USB31_1_TXN	OUT	27		
USB3_BSSB_R2D_C_P	CA3	PCIE1_TXP/USB31_1_TXP	OUT	27		
TP_USB3_EXTC_D2R_N	BY8	PCIE2_RXN/USB31_2_RXN	IN	83		FIXTURE USB-A
TP_USB3_EXTC_D2R_P	BY9	PCIE2_RXP/USB31_2_RXP	IN	83		
TP_USB3_EXTC_R2D_C_N	CA2	PCIE2_TXN/USB31_2_TXN	OUT	83		
TP_USB3_EXTC_R2D_C_P	CA1	PCIE2_TXP/USB31_2_TXP	OUT	83		
PCH_PCIE_WLAN_D2R_N	BY7	PCIE3_RXN/USB31_3_RXN	IN	32		AIRPORT
PCH_PCIE_WLAN_D2R_P	BY6	PCIE3_RXP/USB31_3_RXP	IN	32		
PCH_PCIE_WLAN_R2D_C_N	BY4	PCIE3_TXN/USB31_3_TXN	OUT	32		
PCH_PCIE_WLAN_R2D_C_P	BY3	PCIE3_TXP/USB31_3_TXP	OUT	32		
USB3_EXTD_D2R_N	BW6	PCIE4_RXN/USB31_4_RXN	IN	83		EXT USB-A
USB3_EXTD_D2R_P	BW5	PCIE4_RXP/USB31_4_RXP	IN	83		
USB3_EXTD_R2D_C_N	BW2	PCIE4_TXN/USB31_4_TXN	OUT	83		
USB3_EXTD_R2D_C_P	BW1	PCIE4_TXP/USB31_4_TXP	OUT	83		
PCIE_TBT_X_D2R_N<0>	BW9	PCIE5_RXN/USB31_5_RXN	IN	27		THUNDERBOLT X LANE 0
PCIE_TBT_X_D2R_P<0>	BW8	PCIE5_RXP/USB31_5_RXP	IN	27		
PCIE_TBT_X_R2D_C_N<0>	BW4	PCIE5_TXN/USB31_5_TXN	OUT	27		
PCIE_TBT_X_R2D_C_P<0>	BW3	PCIE5_TXP/USB31_5_TXP	OUT	27		
PCIE_TBT_X_D2R_N<1>	BU6	PCIE6_RXN/USB31_6_RXN	IN	27		THUNDERBOLT X LANE 1
PCIE_TBT_X_D2R_P<1>	BU5	PCIE6_RXP/USB31_6_RXP	IN	27		
PCIE_TBT_X_R2D_C_N<1>	BU4	PCIE6_TXN/USB31_6_TXN	OUT	27		
PCIE_TBT_X_R2D_C_P<1>	BU3	PCIE6_TXP/USB31_6_TXP	OUT	27		
PCIE_TBT_X_D2R_N<2>	BT7	PCIE7_RXN	IN	27		THUNDERBOLT X LANE 2
PCIE_TBT_X_D2R_P<2>	BT6	PCIE7_RXP	IN	27		
PCIE_TBT_X_R2D_C_N<2>	BU2	PCIE7_TXN	OUT	27		
PCIE_TBT_X_R2D_C_P<2>	BU1	PCIE7_TXP	OUT	27		
PCIE_TBT_X_D2R_N<3>	BU9	PCIE8_RXN	IN	27		THUNDERBOLT X LANE 3
PCIE_TBT_X_D2R_P<3>	BU8	PCIE8_RXP	IN	27		
PCIE_TBT_X_R2D_C_N<3>	BT4	PCIE8_TXN	OUT	27		
PCIE_TBT_X_R2D_C_P<3>	BT3	PCIE8_TXP	OUT	27		
NC	BP5	PCIE9_RXN				
NC	BP6	PCIE9_RXP				
NC	BR2	PCIE9_TXN				
NC	BR1	PCIE9_TXP				
NC	BN6	PCIE10_RXN				
NC	BN5	PCIE10_RXP				
NC	BR4	PCIE10_TXN				
NC	BR3	PCIE10_TXP				
PCH_PCIE_RCOMP_N	CE6	PCIE_RCOMP_N				
PCH_PCIE_RCOMP_P	CE5	PCIE_RCOMP_P				
XDP_CPU_PRDY_L	W1	PROC_PRDY*	OUT	16		
XDP_CPU_PREQ_L	W2	PROC_PREQ*	IN	16		
PCH_GPP_A7	CC32	GPP_A7/PIRQA*		14		
NC	BN10	PCIE11_RXN/SATA0_RXN				
NC	BN8	PCIE11_RXP/SATA0_RXP				
NC	BN4	PCIE11_TXN/SATA0_TXN				
NC	BN3	PCIE11_TXP/SATA0_TXP				
NC	BL6	PCIE12_RXN/SATA1A_RXN				
NC	BL5	PCIE12_RXP/SATA1A_RXP				
NC	BN2	PCIE12_TXN/SATA1A_TXN				
NC	BN1	PCIE12_TXP/SATA1A_TXP				

PCIE/USB3/SATA

Net	Pin	Signal	Dir	Pin	Group
PCIE_SOC_D2R_N<0>	BK6	PCIE13_RXN	IN	37	SOC LANE 0
PCIE_SOC_D2R_P<0>	BK5	PCIE13_RXP	IN	37	
PCIE_SOC_R2D_C_N<0>	BM4	PCIE13_TXN	OUT	43	
PCIE_SOC_R2D_C_P<0>	BM3	PCIE13_TXP	OUT	43	
PCIE_SOC_D2R_N<1>	BJ6	PCIE14_RXN	IN	37	SOC LANE 1
PCIE_SOC_D2R_P<1>	BJ5	PCIE14_RXP	IN	37	
PCIE_SOC_R2D_C_N<1>	BL2	PCIE14_TXN	OUT	43	
PCIE_SOC_R2D_C_P<1>	BL1	PCIE14_TXP	OUT	43	
PCIE_SOC_D2R_N<2>	BG5	PCIE15_RXN/SATA1B_RXN	IN	37	SOC LANE 2
PCIE_SOC_D2R_P<2>	BG6	PCIE15_RXP/SATA1B_RXP	IN	37	
PCIE_SOC_R2D_C_N<2>	BL4	PCIE15_TXN/SATA1B_TXN	OUT	43	
PCIE_SOC_R2D_C_P<2>	BL3	PCIE15_TXP/SATA1B_TXP	OUT	43	
PCIE_SOC_D2R_N<3>	BE5	PCIE16_RXN/SATA2_RXN	IN	37	SOC LANE 3
PCIE_SOC_D2R_P<3>	BE6	PCIE16_RXP/SATA2_RXP	IN	37	
PCIE_SOC_R2D_C_N<3>	BJ4	PCIE16_TXN/SATA2_TXN	OUT	43	
PCIE_SOC_R2D_C_P<3>	BJ3	PCIE16_TXP/SATA2_TXP	OUT	43	
USB_EXTA_N	CE3	USB2_1N	BI		TO TP
USB_EXTA_P	CE4	USB2_1P	BI		
NC_USB_EXTBN	CE1	USB2_2N			NOT USED
NC_USB_EXTBP	CE2	USB2_2P			
NC_USB_EXTCN	CG3	USB2_3N			NOT USED
NC_USB_EXTCP	CG4	USB2_3P			
TP_USB_FIXT2_N	CD3	USB2_4N	BI	83	TP FOR FIXTURE
TP_USB_FIXT2_P	CD4	USB2_4P	BI	83	
NC_USB_EXTDN	CG5	USB2_5N			NOT USED
NC_USB_EXTDP	CG6	USB2_5P			
USB2_UPC_PCH_XA_N	CC1	USB2_6N	BI	28	XA RP
USB2_UPC_PCH_XA_P	CC2	USB2_6P	BI	28	
NC_TP_USB_UPC_PCH_TA_N	CG8	USB2_7N			NOT USED
NC_TP_USB_UPC_PCH_TA_P	CG9	USB2_7P			
USB2_UPC_PCH_XB_N	CB8	USB2_8N	BI	29	XB RP
USB2_UPC_PCH_XB_P	CB9	USB2_8P	BI	29	
NC_TP_USB_UPC_PCH_TB_N	CH5	USB2_9N			NOT USED
NC_TP_USB_UPC_PCH_TB_P	CH6	USB2_9P			
TP_USB_FIXT1_N	CC3	USB2_10N	BI	83	TP FOR FIXTURE
TP_USB_FIXT1_P	CC4	USB2_10P	BI	83	
PCH_USB2_COMP	CC5	USB2_COMP			
	CE8	USB2_ID			(GROUNDED PER CFL EDS)
PCH_USB2_VBUSSENSE	CC6	USB2_VBUSSENSE			
XDP_PCH_OBSFN_C1	CE9	GPP_E3/CPU_GP0	IN	16	
XDP_PCH_OBSDATA_A0	CP8	GPP_E4/DEVSLP0	IN	16	
XDP_PCH_OBSDATA_A1	CR8	GPP_E5/DEVSLP1	IN	16	
XDP_PCH_OBSDATA_A2	CM8	GPP_E6/DEVSLP2	IN	16	
NC_SDCONN_OC_L	CH23	GPP_D22/SPI1_IO3			
NC_PCH_ENET_LOW_PWR	CK23	GPP_D23/I2S_MCLK			
NC_PCH_GPP_D18	CJ25	GPP_D18/DMIC_DATA1			
NC_PCH_GPP_D19	CP24	GPP_D19/DMIC_CLK0			
NC_PCH_GPP_D20	CN24	GPP_D20/DMIC_DATA0			
XDP_PCH_OBSDATA_D1	CN8	GPP_E0/SATAXPCIE0/SATAGP0	IN	16	
XDP_PCH_OBSDATA_D2	CM10	GPP_E1/SATAXPCIE1/SATAGP1	IN	16	
XDP_PCH_OBSDATA_D3	CP10	GPP_E2/SATAXPCIE2/SATAGP2	IN	16	

R1504 100 1% 1/20W MF 201 — PLACE_NEAR=U0500.CE6:12.7mm

R1503 1K 5% 1/20W MF 201 — PLACE_NEAR=U0500.CC6:12.7MM

R1501 113 1% 1/20W MF 201 — PLACE_NEAR=U0500.CC5:12.7MM

ANY CLKREQ CAN MAP TO ANY CLK.
ANY CLKREQ OR CLK CAN MAP TO ANY PCIE PORT.
UNUSED CLKREQS AND CLKS SHOULD BE DISABLED.
PER SKYLAKE PDG, SKYLAKE PCH EDS.

U0500
CFL-U
4+3E
BGA
SYM 10 OF 20
CLOCK SIGNALS
OMIT_TABLE

Net	Pin	Signal	Dir	Pin
NC_PCIE_CLK100M0N	AW2	CLKOUT_PCIE_N0		
NC_PCIE_CLK100M0P	AY3	CLKOUT_PCIE_P0		
NC_DEBUG_CLKREQ0_L	CF32	GPP_B5/SRCCLKREQ0*		
PCIE_CLK100M_SOC_N	BC1	CLKOUT_PCIE_N1	OUT	84 37
PCIE_CLK100M_SOC_P	BC2	CLKOUT_PCIE_P1	OUT	84 37
SOC_CLKREQ_L	CE32	GPP_B6/SRCCLKREQ1*	IN	37 14
PCIE_CLK100M_TBT_X_N	BD3	CLKOUT_PCIE_N2	OUT	84 25
PCIE_CLK100M_TBT_X_P	BC3	CLKOUT_PCIE_P2	OUT	84 25
TBT_X_CLKREQ_L	CF30	GPP_B7/SRCCLKREQ2*	IN	25 14
NC_PCIE_CLK100M3N	BH3	CLKOUT_PCIE_N3		
NC_PCIE_CLK100M3P	BH4	CLKOUT_PCIE_P3		
NC_DEBUG_CLKREQ3_L	CE31	GPP_B8/SRCCLKREQ3*		
PCH_PCIE_CLK100M_WLAN_N	BA1	CLKOUT_PCIE_N4	OUT	32
PCH_PCIE_CLK100M_WLAN_P	BA2	CLKOUT_PCIE_P4	OUT	32
PCH_WLAN_CLKREQ_L	CE30	GPP_B9/SRCCLKREQ4*	IN	32 14
NC_PCIE_CLK100M5N	BE1	CLKOUT_PCIE_N5		
NC_PCIE_CLK100M5P	BE2	CLKOUT_PCIE_P5		
NC_DEBUG_CLKREQ5_L	CF31	GPP_B10/SRCCLKREQ5*		
NC_ITPXDP_CLK100MN	AU1	CLKOUT_ITPXDP_N		
NC_ITPXDP_CLK100MP	AU2	CLKOUT_ITPXDP_P		
NC_PCH_CLK32K_SUS	BT32	GPD8/SUSCLK		
PCH_CLK24M_XTALIN	CK3	XTAL_IN	IN	17
PCH_CLK24M_XTALOUT	CK2	XTAL_OUT	OUT	17
PCH_CLKIN_XTAL	CM3	CLKIN_XTAL		14
PCH_DIFFCLK_BIASREF	CJ1	CLK_BIASREF		14
PMU_CLK32K_PCH_1V0	BN31	RTCX1		
NC_TP_PCH_RTCX2_OUT	BN32	RTCX2		
PCH_RTC_RESET_L	BR37	SRTCRST*	IN	72 83
	BR34	RTCRST*		

R1573 100K 1% 1/20W MF 201 — PMU_CLK32K_PCH (IN 72)

R1572 127K 1% 1/20W MF 201 — PLACE_NEAR=U0500.BN31:5MM, PLACE_NEAR=U0500.BN31:5MM

PP3V3_S5 (4 5 7 11 12 13 18 42 43 47 69 71 73 74 83 89)

R1531 47K 5% 1/20W MF 201 — TBT_X_CLKREQ_L (14 25)

R1532 10K 5% 1/20W MF 201 — PCH_GPP_A7 (14)
NOSTUFF

PP1V8_S5 (7 11 12 13 15 16 17 18 32 42 47 53 55 59 70 72 73 74 83)

R1533 47K 5% 1/20W MF 201 — SOC_CLKREQ_L (14 37)

R1534 47K 5% 1/20W MF 201 — PCH_WLAN_CLKREQ_L (14 32)

R1521 0 5% 1/20W MF 0201 — PCH_CLKIN_XTAL (14)
PLACE_NEAR=U0500.CM3:25.4mm

R1520 60.4 1% 1/20W MF 201 — PCH_DIFFCLK_BIASREF (14)
PLACE_NEAR=U0500.CJ1:25.4mm

BOM_COST_GROUP=CPU & CHIPSET

PAGE TITLE: PCH PCIE/USB/CLKS

Apple Inc.

DRAWING NUMBER: 051-05309 — SIZE: D
REVISION: 5.1.0
BRANCH:
PAGE: 15 OF 500
SHEET: 14 OF 98

NOTICE OF PROPRIETARY PROPERTY:
THE INFORMATION CONTAINED HEREIN IS THE PROPRIETARY PROPERTY OF APPLE INC.
THE POSESSOR AGREES TO THE FOLLOWING:
I TO MAINTAIN THIS DOCUMENT IN CONFIDENCE
II NOT TO REPRODUCE OR COPY IT
III NOT TO REVEAL OR PUBLISH IT IN WHOLE OR PART
IV ALL RIGHTS RESERVED

www.haojiyoubbs.com
QQ微信：181806465

ALL GPP_F* PINS ARE 1.8V ONLY!

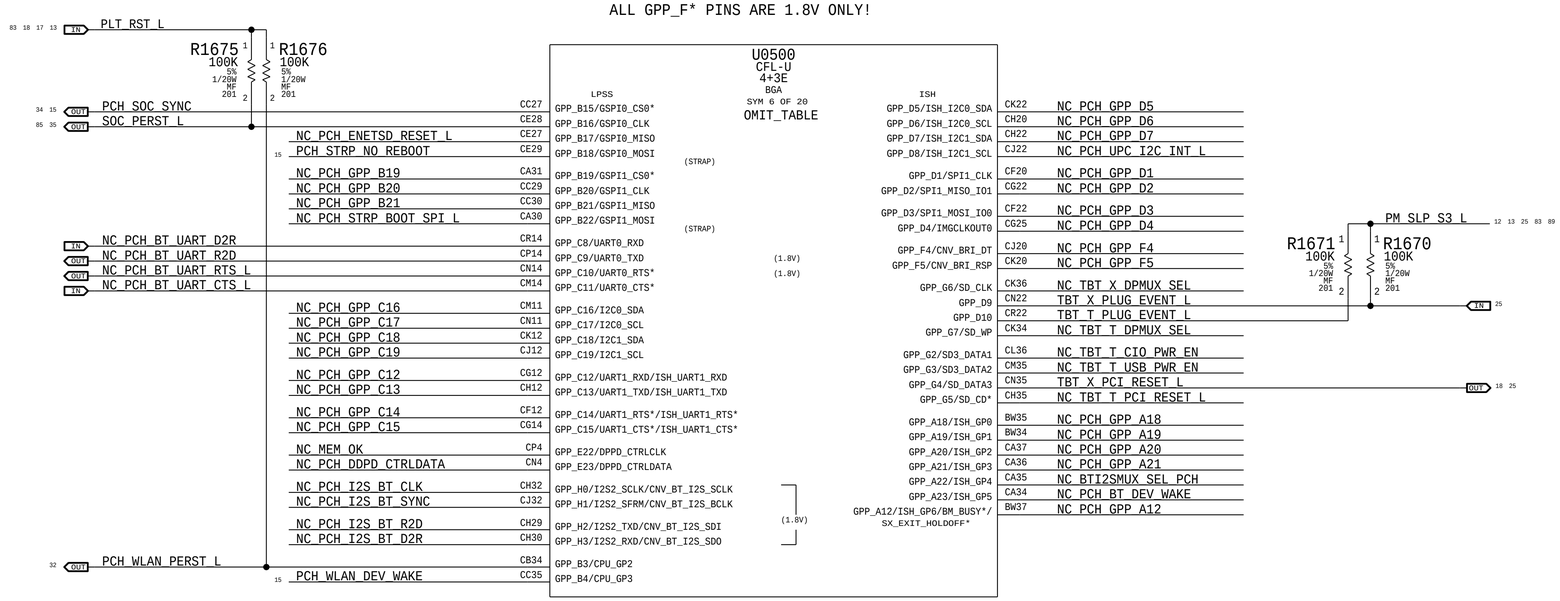

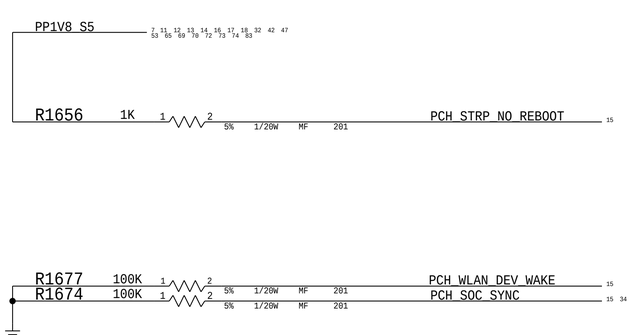

BOM_COST_GROUP=CPU & CHIPSET

PAGE TITLE	PCH SPI/UART/GPIO
Apple Inc.	DRAWING NUMBER 051-05309 SIZE D
	REVISION 5.1.0
	BRANCH
	PAGE 16 OF 500
	SHEET 15 OF 98

NOTICE OF PROPRIETARY PROPERTY:
THE INFORMATION CONTAINED HEREIN IS THE PROPRIETARY PROPERTY OF APPLE INC.
THE POSESSOR AGREES TO THE FOLLOWING:
I TO MAINTAIN THIS DOCUMENT IN CONFIDENCE
II NOT TO REPRODUCE OR COPY IT
III NOT TO REVEAL OR PUBLISH IT IN WHOLE OR PART
IV ALL RIGHTS RESERVED

www.haojiyoubbs.com
QQ微信：181806465

Primary / Merged (CPU/PCH) Micro2-XDP

NOTE: This is not the standard XDP pinout.
Use with 921-0133 Adapter Flex to
support chipset debug.

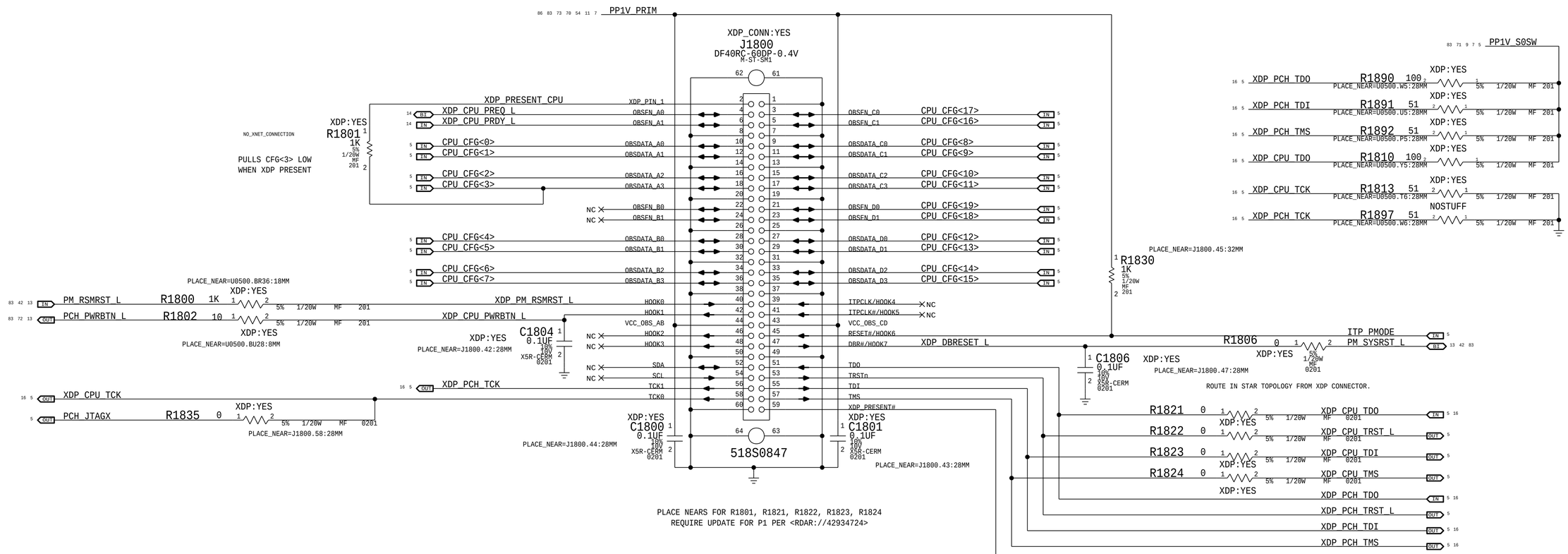

PLACE NEARS FOR R1801, R1821, R1822, R1823, R1824
REQUIRE UPDATE FOR P1 PER <RDAR://42934724>

PCH XDP Signals

These signals do not connect to the Primary (Merged) XDP connector in this architecture.
The PDG puts them on a secondary XDP connector that is only needed in some PCH debugging situation.
They are listed here to show their secondary XDP functions and to provide test points for signals that are not used elsewhere.

PCH/XDP Signals | Non-XDP Signals

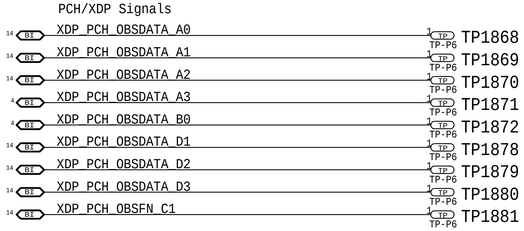

Unused GPIOs have TPs.

BOM_COST_GROUP=DEBUG

PAGE TITLE	CPU/PCH Merged XDP
Apple Inc.	DRAWING NUMBER 051-05309 SIZE D
	REVISION 5.1.0
	BRANCH
	PAGE 18 OF 500
	SHEET 16 OF 98

NOTICE OF PROPRIETARY PROPERTY:
THE INFORMATION CONTAINED HEREIN IS THE PROPRIETARY PROPERTY OF APPLE INC.
THE POSESSOR AGREES TO THE FOLLOWING:
I TO MAINTAIN THIS DOCUMENT IN CONFIDENCE
II NOT TO REPRODUCE OR COPY IT
III NOT TO REVEAL OR PUBLISH IT IN WHOLE OR PART
IV ALL RIGHTS RESERVED

www.haojiyoubbs.com
QQ微信：181806465

24MHz CLOCK

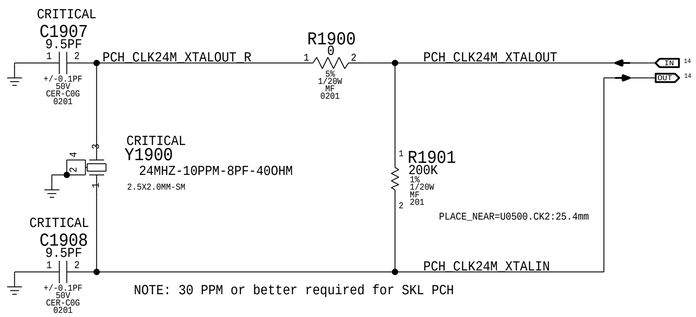

THRMTRIP# ISOLATION & LEVEL-SHIFT TO 1V8

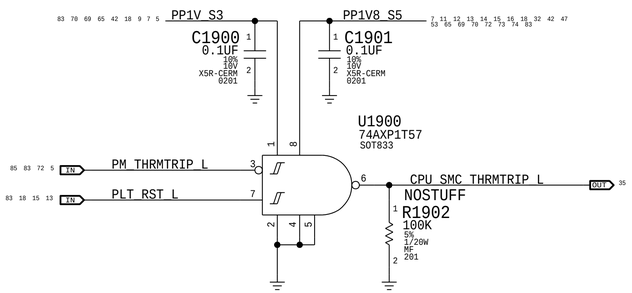

BOM_COST_GROUP=CPU & CHIPSET

PAGE TITLE	Chipset Support 1
	Apple Inc.
DRAWING NUMBER	051-05309
SIZE	D
REVISION	5.1.0
BRANCH	
PAGE	19 OF 500
SHEET	17 OF 98

NOTICE OF PROPRIETARY PROPERTY:
THE INFORMATION CONTAINED HEREIN IS THE PROPRIETARY PROPERTY OF APPLE INC.
THE POSESSOR AGREES TO THE FOLLOWING:
I TO MAINTAIN THIS DOCUMENT IN CONFIDENCE
II NOT TO REPRODUCE OR COPY IT
III NOT TO REVEAL OR PUBLISH IT IN WHOLE OR PART
IV ALL RIGHTS RESERVED

www.haojiyoubbs.com
QQ微信：181806465

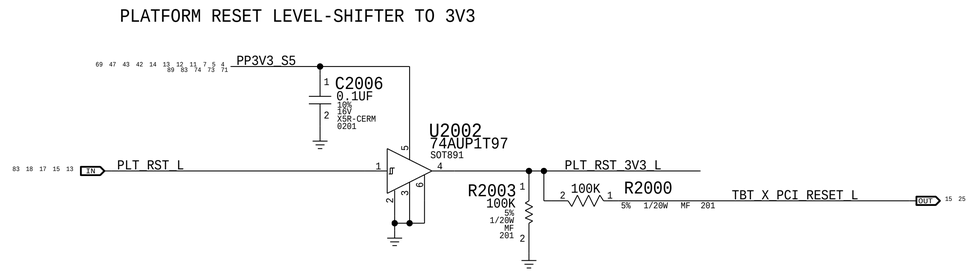

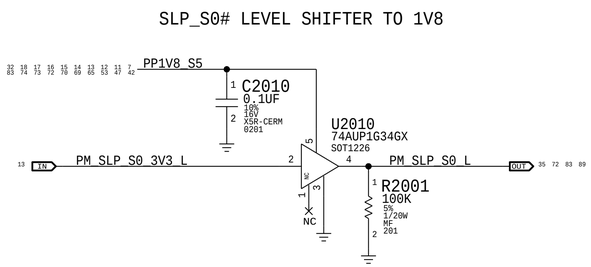

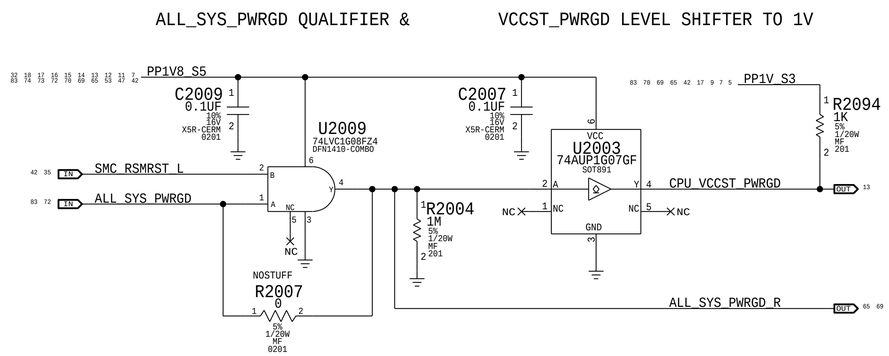

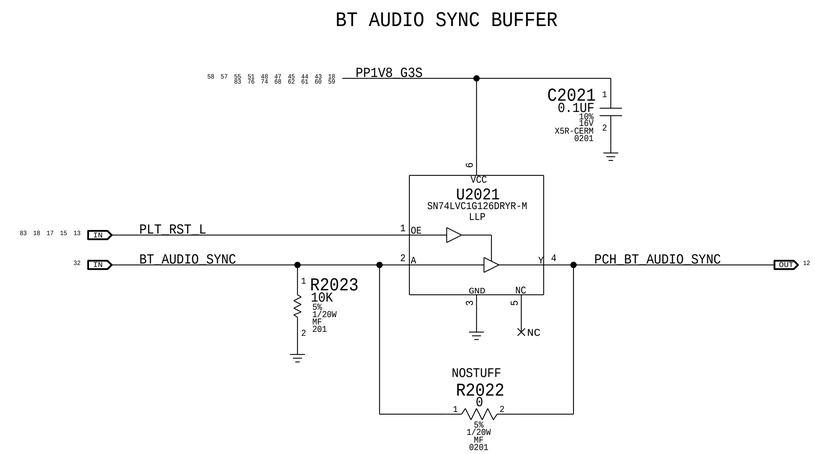

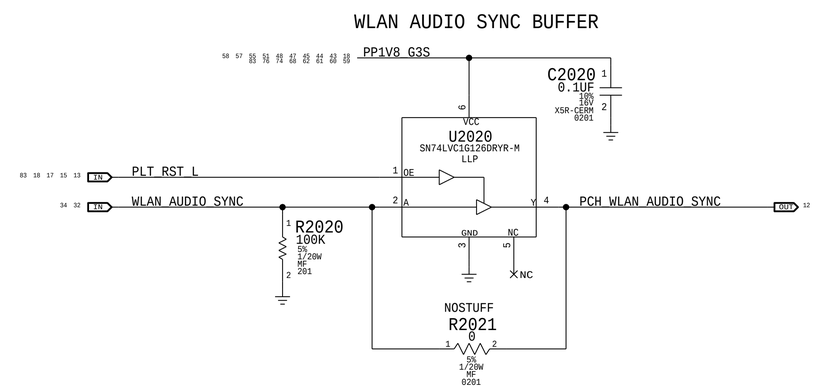

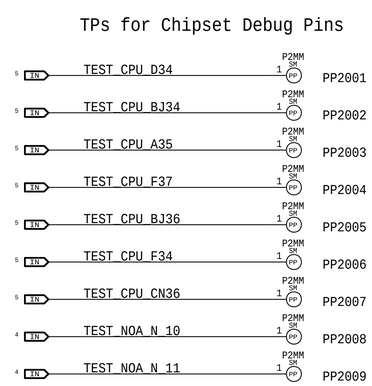

BOM_COST_GROUP=CPU & CHIPSET

PAGE TITLE
CHIPSET SUPPORT 2

Apple Inc.

DRAWING NUMBER 051-05309
SIZE D
REVISION 5.1.0
BRANCH
PAGE 20 OF 500
SHEET 18 OF 98

NOTICE OF PROPRIETARY PROPERTY:
THE INFORMATION CONTAINED HEREIN IS THE PROPRIETARY PROPERTY OF APPLE INC.
THE POSESSOR AGREES TO THE FOLLOWING:
I TO MAINTAIN THIS DOCUMENT IN CONFIDENCE
II NOT TO REPRODUCE OR COPY IT
III NOT TO REVEAL OR PUBLISH IT IN WHOLE OR PART
IV ALL RIGHTS RESERVED

www.haojiyoubbs.com
QQ微信：181806465

CPU-Based Margining

VRef Dividers

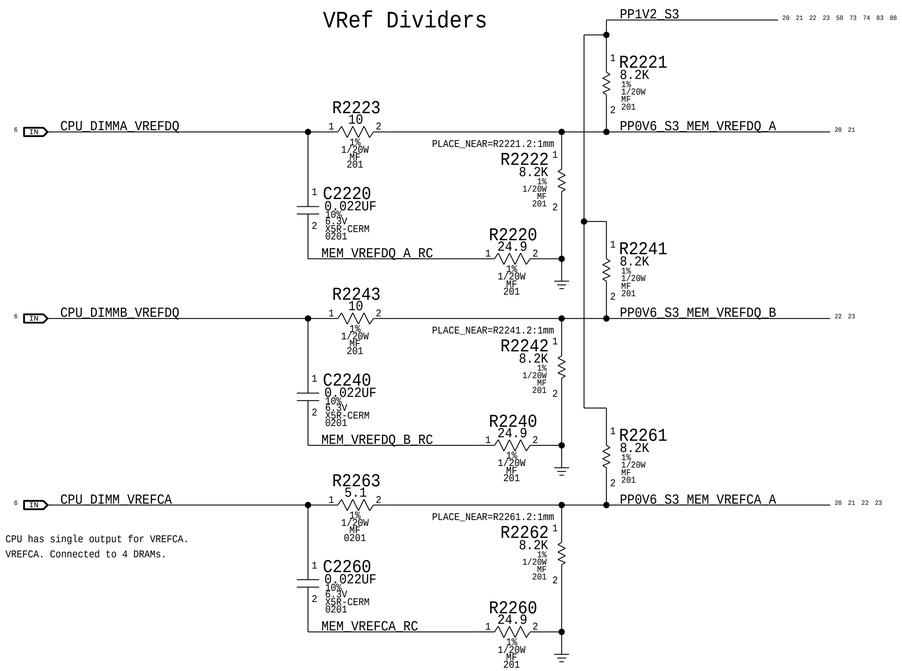

NOTE: CPU has single output for VREFCA.
VREFCA. Connected to 4 DRAMs.

BOM_COST_GROUP=CPU & CHIPSET

SYNC_MASTER:	SYNC_DATE=
PAGE TITLE	LPDDR3 VREF MARGINING
Apple Inc.	DRAWING NUMBER 051-05309 / SIZE D
	REVISION 5.1.0
	BRANCH
	PAGE 22 OF 500
	SHEET 19 OF 98

NOTICE OF PROPRIETARY PROPERTY:
THE INFORMATION CONTAINED HEREIN IS THE PROPRIETARY PROPERTY OF APPLE INC.
THE POSESSOR AGREES TO THE FOLLOWING:
I TO MAINTAIN THIS DOCUMENT IN CONFIDENCE
II NOT TO REPRODUCE OR COPY IT
III NOT TO REVEAL OR PUBLISH IT IN WHOLE OR PART
IV ALL RIGHTS RESERVED

www.haojiyoubbs.com
QQ微信：181806465

LPDDR3 CHANNEL A (0-31)

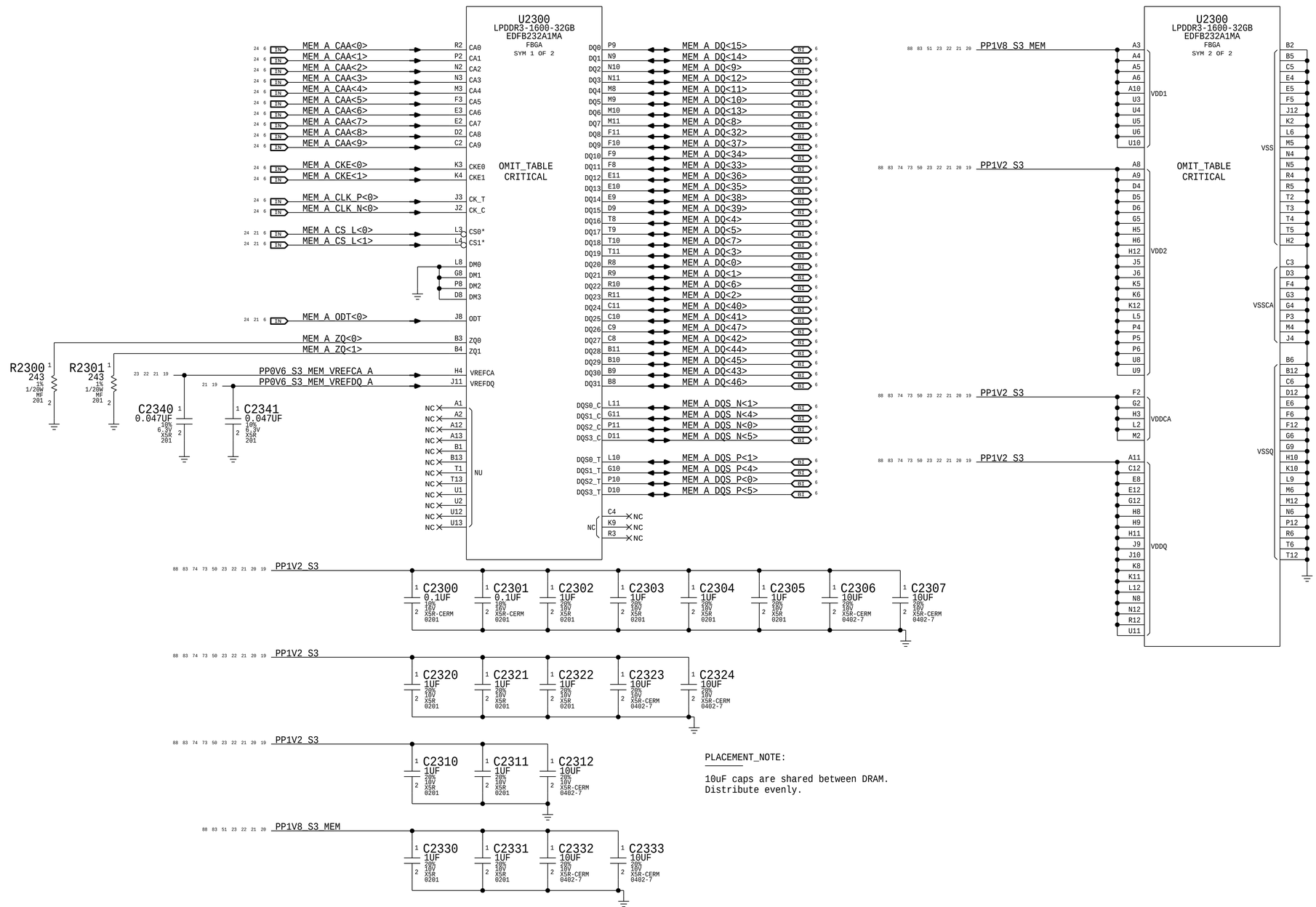

PLACEMENT_NOTE:

10uF caps are shared between DRAM.
Distribute evenly.

BOM_COST_GROUP=DRAM

SYNC_MASTER= SYNC_DATE=

PAGE TITLE
LPDDR3 DRAM Channel A (00-31)

Apple Inc.

DRAWING NUMBER 051-05309
SIZE D
REVISION 5.1.0
BRANCH
PAGE 23 OF 500
SHEET 20 OF 98

NOTICE OF PROPRIETARY PROPERTY:
THE INFORMATION CONTAINED HEREIN IS THE PROPRIETARY PROPERTY OF APPLE INC.
THE POSESSOR AGREES TO THE FOLLOWING:
I TO MAINTAIN THIS DOCUMENT IN CONFIDENCE
II NOT TO REPRODUCE OR COPY IT
III NOT TO REVEAL OR PUBLISH IT IN WHOLE OR PART
IV ALL RIGHTS RESERVED

www.haojiyoubbs.com
QQ微信：181806465

LPDDR3 CHANNEL A (32-63)

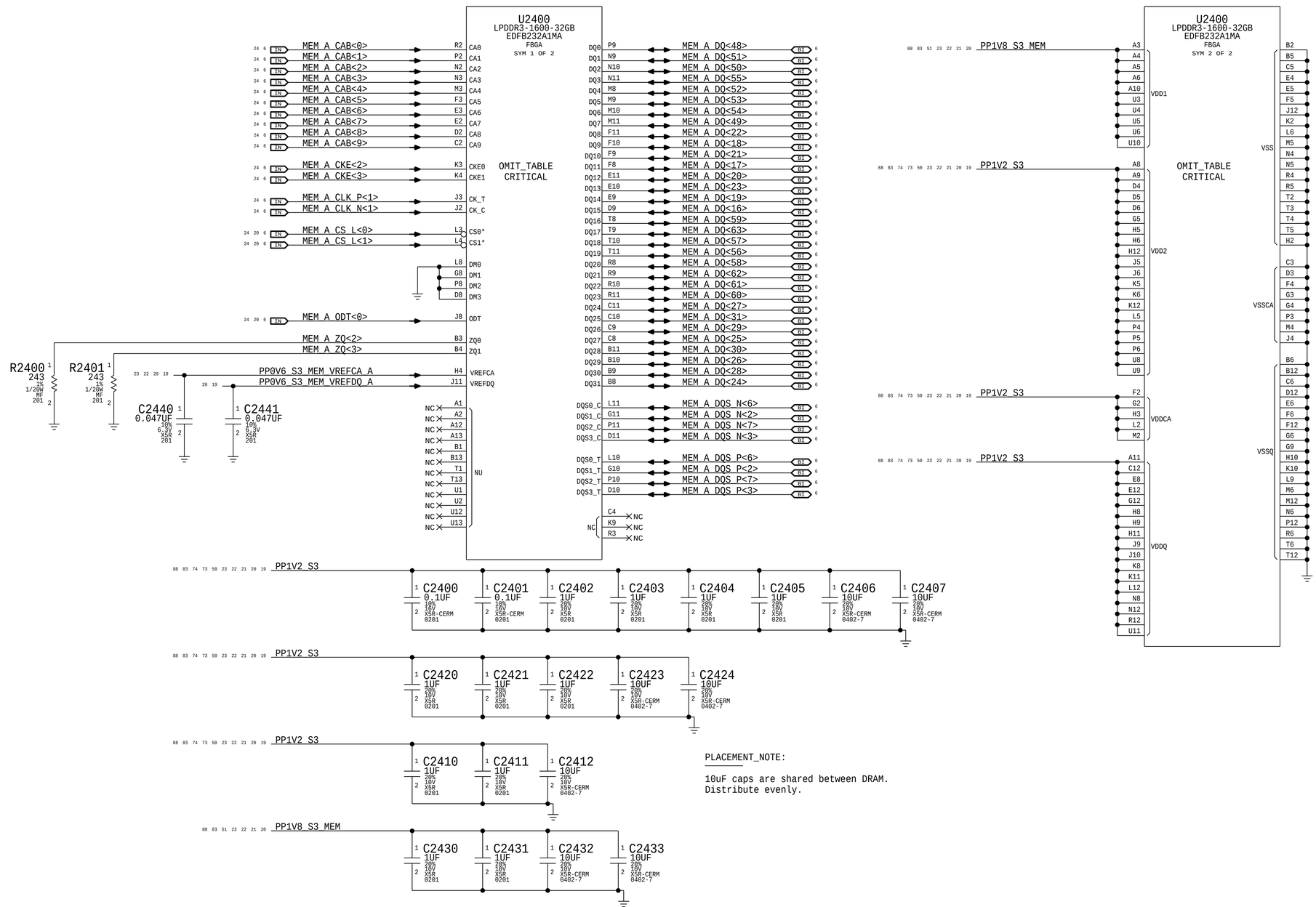

PLACEMENT_NOTE:

10uF caps are shared between DRAM.
Distribute evenly.

BOM_COST_GROUP=DRAM

SYNC_MASTER= SYNC_DATE=

PAGE TITLE
LPDDR3 DRAM Channel A (32-63)

Apple Inc.

DRAWING NUMBER	051-05309
SIZE	D
REVISION	5.1.0
BRANCH	
PAGE	24 OF 500
SHEET	21 OF 98

NOTICE OF PROPRIETARY PROPERTY:
THE INFORMATION CONTAINED HEREIN IS THE PROPRIETARY PROPERTY OF APPLE INC.
THE POSESSOR AGREES TO THE FOLLOWING:
I TO MAINTAIN THIS DOCUMENT IN CONFIDENCE
II NOT TO REPRODUCE OR COPY IT
III NOT TO REVEAL OR PUBLISH IT IN WHOLE OR PART
IV ALL RIGHTS RESERVED

www.haojiyoubbs.com
QQ微信：181806465

LPDDR3 CHANNEL B (0-31)

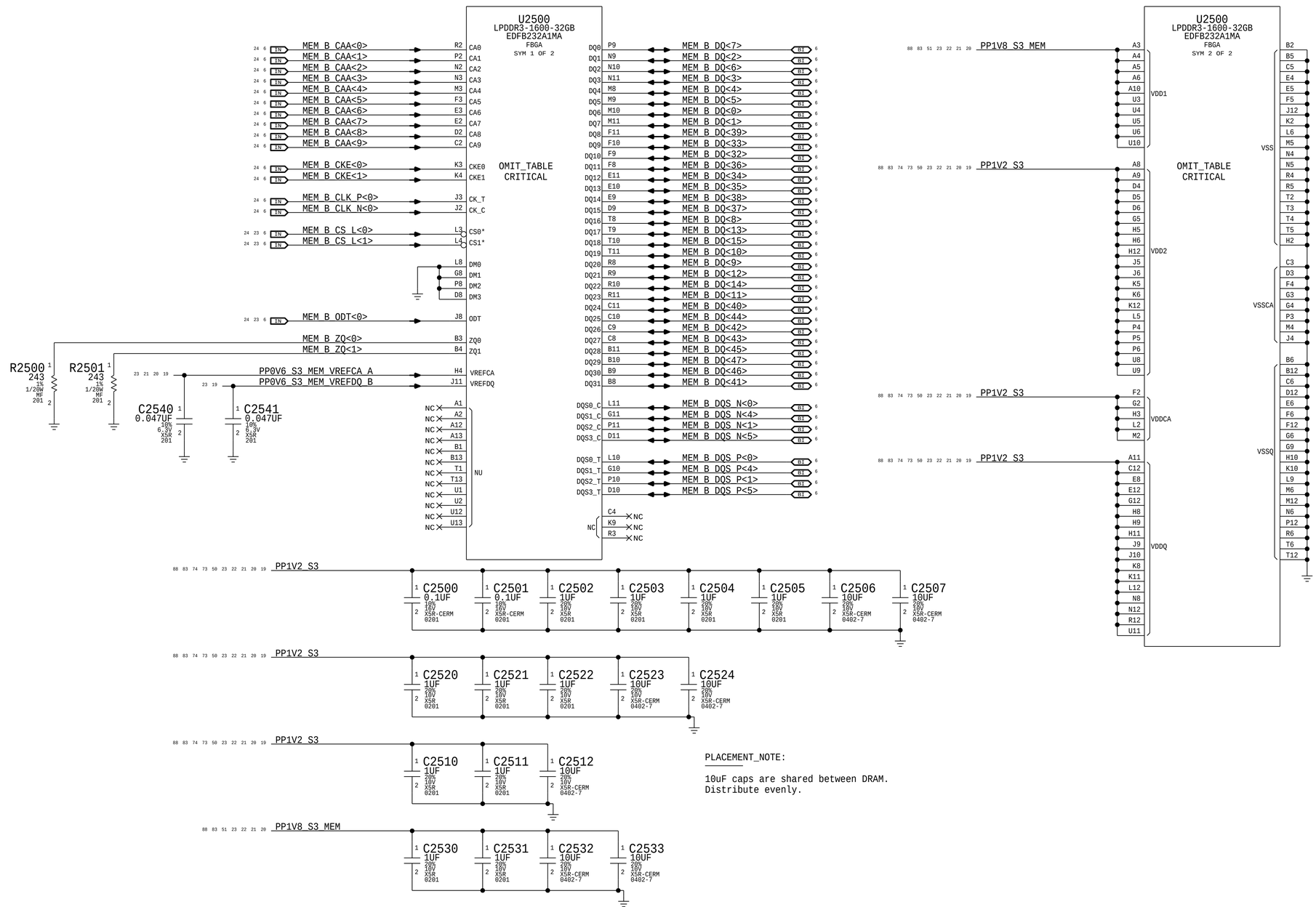

PLACEMENT_NOTE:

10uF caps are shared between DRAM.
Distribute evenly.

BOM_COST_GROUP=DRAM

SYNC_MASTER= SYNC_DATE=

PAGE TITLE
LPDDR3 DRAM Channel B (00-31)

Apple Inc.

DRAWING NUMBER 051-05309 SIZE D

REVISION 5.1.0

BRANCH

PAGE 25 OF 500

SHEET 22 OF 98

NOTICE OF PROPRIETARY PROPERTY:

THE INFORMATION CONTAINED HEREIN IS THE PROPRIETARY PROPERTY OF APPLE INC.
THE POSESSOR AGREES TO THE FOLLOWING:
I TO MAINTAIN THIS DOCUMENT IN CONFIDENCE
II NOT TO REPRODUCE OR COPY IT
III NOT TO REVEAL OR PUBLISH IT IN WHOLE OR PART
IV ALL RIGHTS RESERVED

www.haojiyoubbs.com
QQ微信：181806465

LPDDR3 CHANNEL B (32-63)

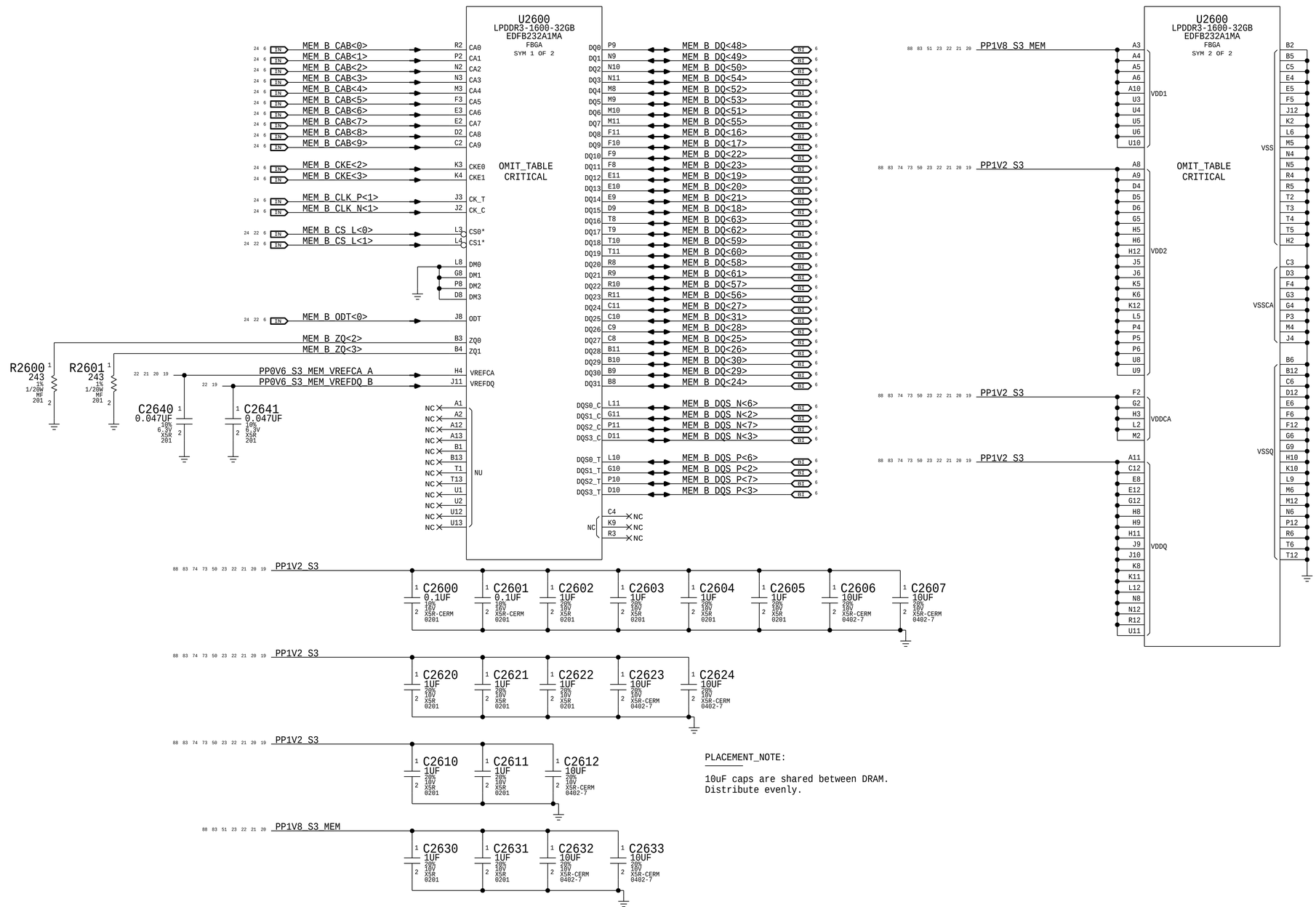

PLACEMENT_NOTE:

10uF caps are shared between DRAM.
Distribute evenly.

BOM_COST_GROUP=DRAM

SYNC_MASTER=	SYNC_DATE=
PAGE TITLE	LPDDR3 DRAM Channel B (32-63)
Apple Inc.	DRAWING NUMBER 051-05309 / SIZE D
	REVISION 5.1.0
NOTICE OF PROPRIETARY PROPERTY: THE INFORMATION CONTAINED HEREIN IS THE PROPRIETARY PROPERTY OF APPLE INC. THE POSESSOR AGREES TO THE FOLLOWING: I TO MAINTAIN THIS DOCUMENT IN CONFIDENCE II NOT TO REPRODUCE OR COPY IT III NOT TO REVEAL OR PUBLISH IT IN WHOLE OR PART IV ALL RIGHTS RESERVED	BRANCH
	PAGE 26 OF 500
	SHEET 23 OF 98

www.haojiyoubbs.com
QQ微信：181806465

Intel recommends 68 Ohm for CMD/ADDR, 80 Ohm for CTRL/CKE, 38 Ohm for CLK

88 83 73 24 PP0V6_S0_DDRVTT

20 6	IN	MEM_A_CAA<9>	R2700	68	1%	1/20W	201	MF	C2700 0.47UF 20% 4V CERM-X5R-1 201
20 6	IN	MEM_A_CAA<8>	R2701	68	1%	1/20W	201	MF	
20 6	IN	MEM_A_CAA<6>	R2702	68	1%	1/20W	201	MF	C2701 0.47UF 20% 4V CERM-X5R-1 201 / C2702 0.47UF 20% 4V CERM-X5R-1 201
20 6	IN	MEM_A_CAA<7>	R2703	68	1%	1/20W	201	MF	
20 6	IN	MEM_A_CAA<5>	R2704	68	1%	1/20W	201	MF	
20 6	IN	MEM_A_CLK_P<0>	R2705	39	1%	1/20W	201	MF	
20 6	IN	MEM_A_CLK_N<0>	R2706	39	1%	1/20W	201	MF	
20 6	IN	MEM_A_CKE<1>	R2707	82	1%	1/20W	201	MF	C2703 0.47UF 20% 4V CERM-X5R-1 201 / C2704 0.47UF 20% 4V CERM-X5R-1 201
20 6	IN	MEM_A_CKE<0>	R2708	82	1%	1/20W	201	MF	
20 6	IN	MEM_A_CAA<4>	R2709	68	1%	1/20W	201	MF	
20 6	IN	MEM_A_CAA<3>	R2710	68	1%	1/20W	201	MF	
20 6	IN	MEM_A_CAA<2>	R2711	68	1%	1/20W	201	MF	
20 6	IN	MEM_A_CAA<1>	R2712	68	1%	1/20W	201	MF	
20 6	IN	MEM_A_CAA<0>	R2713	68	1%	1/20W	201	MF	
21 6	IN	MEM_A_CAB<9>	R2714	68	1%	1/20W	201	MF	C2705 0.47UF 20% 4V CERM-X5R-1 201 / C2706 0.47UF 20% 4V CERM-X5R-1 201
21 6	IN	MEM_A_CAB<8>	R2715	68	1%	1/20W	201	MF	
21 6	IN	MEM_A_CAB<6>	R2716	68	1%	1/20W	201	MF	
21 6	IN	MEM_A_CAB<7>	R2717	68	1%	1/20W	201	MF	
21 6	IN	MEM_A_CAB<5>	R2718	68	1%	1/20W	201	MF	
21 6	IN	MEM_A_CLK_P<1>	R2719	39	1%	1/20W	201	MF	
21 6	IN	MEM_A_CLK_N<1>	R2720	39	1%	1/20W	201	MF	
21 6	IN	MEM_A_CKE<2>	R2721	82	1%	1/20W	201	MF	C2707 0.47UF 20% 4V CERM-X5R-1 201 / C2708 0.47UF 20% 4V CERM-X5R-1 201
21 6	IN	MEM_A_CKE<3>	R2722	82	1%	1/20W	201	MF	
21 6	IN	MEM_A_CAB<4>	R2723	68	1%	1/20W	201	MF	
21 6	IN	MEM_A_CAB<2>	R2724	68	1%	1/20W	201	MF	
21 6	IN	MEM_A_CAB<3>	R2725	68	1%	1/20W	201	MF	
21 6	IN	MEM_A_CAB<1>	R2726	68	1%	1/20W	201	MF	
21 6	IN	MEM_A_CAB<0>	R2727	68	1%	1/20W	201	MF	
21 20 6	IN	MEM_A_CS_L<0>	R2728	82	1%	1/20W	201	MF	C2709 0.47UF 20% 4V CERM-X5R-1 201
21 20 6	IN	MEM_A_CS_L<1>	R2729	82	1%	1/20W	201	MF	
21 20 6	IN	MEM_A_ODT<0>	R2730	82	1%	1/20W	201	MF	

CRITICAL
C2720 20UF 20% 6.3V CERM-X5R 0402

88 83 73 24 PP0V6_S0_DDRVTT

22 6	IN	MEM_B_CAA<9>	R2740	68	1%	1/20W	201	MF	C2710 0.47UF 20% 4V CERM-X5R-1 201
22 6	IN	MEM_B_CAA<8>	R2741	68	1%	1/20W	201	MF	
22 6	IN	MEM_B_CAA<7>	R2742	68	1%	1/20W	201	MF	C2711 0.47UF 20% 4V CERM-X5R-1 201 / C2712 0.47UF 20% 4V CERM-X5R-1 201
22 6	IN	MEM_B_CAA<6>	R2743	68	1%	1/20W	201	MF	
22 6	IN	MEM_B_CAA<5>	R2744	68	1%	1/20W	201	MF	
22 6	IN	MEM_B_CLK_P<0>	R2745	39	1%	1/20W	201	MF	
22 6	IN	MEM_B_CLK_N<0>	R2746	39	1%	1/20W	201	MF	
22 6	IN	MEM_B_CKE<1>	R2747	82	1%	1/20W	201	MF	C2713 0.47UF 20% 4V CERM-X5R-1 201 / C2714 0.47UF 20% 4V CERM-X5R-1 201
22 6	IN	MEM_B_CKE<0>	R2748	82	1%	1/20W	201	MF	
22 6	IN	MEM_B_CAA<4>	R2749	68	1%	1/20W	201	MF	
22 6	IN	MEM_B_CAA<2>	R2750	68	1%	1/20W	201	MF	
22 6	IN	MEM_B_CAA<3>	R2751	68	1%	1/20W	201	MF	
22 6	IN	MEM_B_CAA<1>	R2752	68	1%	1/20W	201	MF	
22 6	IN	MEM_B_CAA<0>	R2753	68	1%	1/20W	201	MF	
23 6	IN	MEM_B_CAB<9>	R2754	68	1%	1/20W	201	MF	C2715 0.47UF 20% 4V CERM-X5R-1 201 / C2716 0.47UF 20% 4V CERM-X5R-1 201
23 6	IN	MEM_B_CAB<8>	R2755	68	1%	1/20W	201	MF	
23 6	IN	MEM_B_CAB<7>	R2756	68	1%	1/20W	201	MF	
23 6	IN	MEM_B_CAB<6>	R2757	68	1%	1/20W	201	MF	
23 6	IN	MEM_B_CAB<5>	R2758	68	1%	1/20W	201	MF	
23 6	IN	MEM_B_CLK_N<1>	R2759	39	1%	1/20W	201	MF	
23 6	IN	MEM_B_CLK_P<1>	R2760	39	1%	1/20W	201	MF	
23 6	IN	MEM_B_CKE<2>	R2761	82	1%	1/20W	201	MF	C2717 0.47UF 20% 4V CERM-X5R-1 201 / C2718 0.47UF 20% 4V CERM-X5R-1 201
23 6	IN	MEM_B_CKE<3>	R2762	82	1%	1/20W	201	MF	
23 6	IN	MEM_B_CAB<4>	R2763	68	1%	1/20W	201	MF	
23 6	IN	MEM_B_CAB<2>	R2764	68	1%	1/20W	201	MF	
23 6	IN	MEM_B_CAB<3>	R2765	68	1%	1/20W	201	MF	
23 6	IN	MEM_B_CAB<1>	R2766	68	1%	1/20W	201	MF	
23 6	IN	MEM_B_CAB<0>	R2767	68	1%	1/20W	201	MF	
23 22 6	IN	MEM_B_CS_L<0>	R2768	82	1%	1/20W	201	MF	C2719 0.47UF 20% 4V CERM-X5R-1 201
23 22 6	IN	MEM_B_CS_L<1>	R2769	82	1%	1/20W	201	MF	
23 22 6	IN	MEM_B_ODT<0>	R2770	82	1%	1/20W	201	MF	

CRITICAL
C2740 20UF 20% 6.3V CERM-X5R 0402

BOM_COST_GROUP=DRAM

SYNC_MASTER= SYNC_DATE=

PAGE TITLE
LPDDR3 DRAM Termination

Apple Inc.

DRAWING NUMBER 051-05309 SIZE D
REVISION 5.1.0
BRANCH
PAGE 27 OF 500
SHEET 24 OF 98

NOTICE OF PROPRIETARY PROPERTY:
THE INFORMATION CONTAINED HEREIN IS THE PROPRIETARY PROPERTY OF APPLE INC.
THE POSESSOR AGREES TO THE FOLLOWING:
I TO MAINTAIN THIS DOCUMENT IN CONFIDENCE
II NOT TO REPRODUCE OR COPY IT
III NOT TO REVEAL OR PUBLISH IT IN WHOLE OR PART
IV ALL RIGHTS RESERVED

www.haojiyoubbs.com
QQ微信：181806465

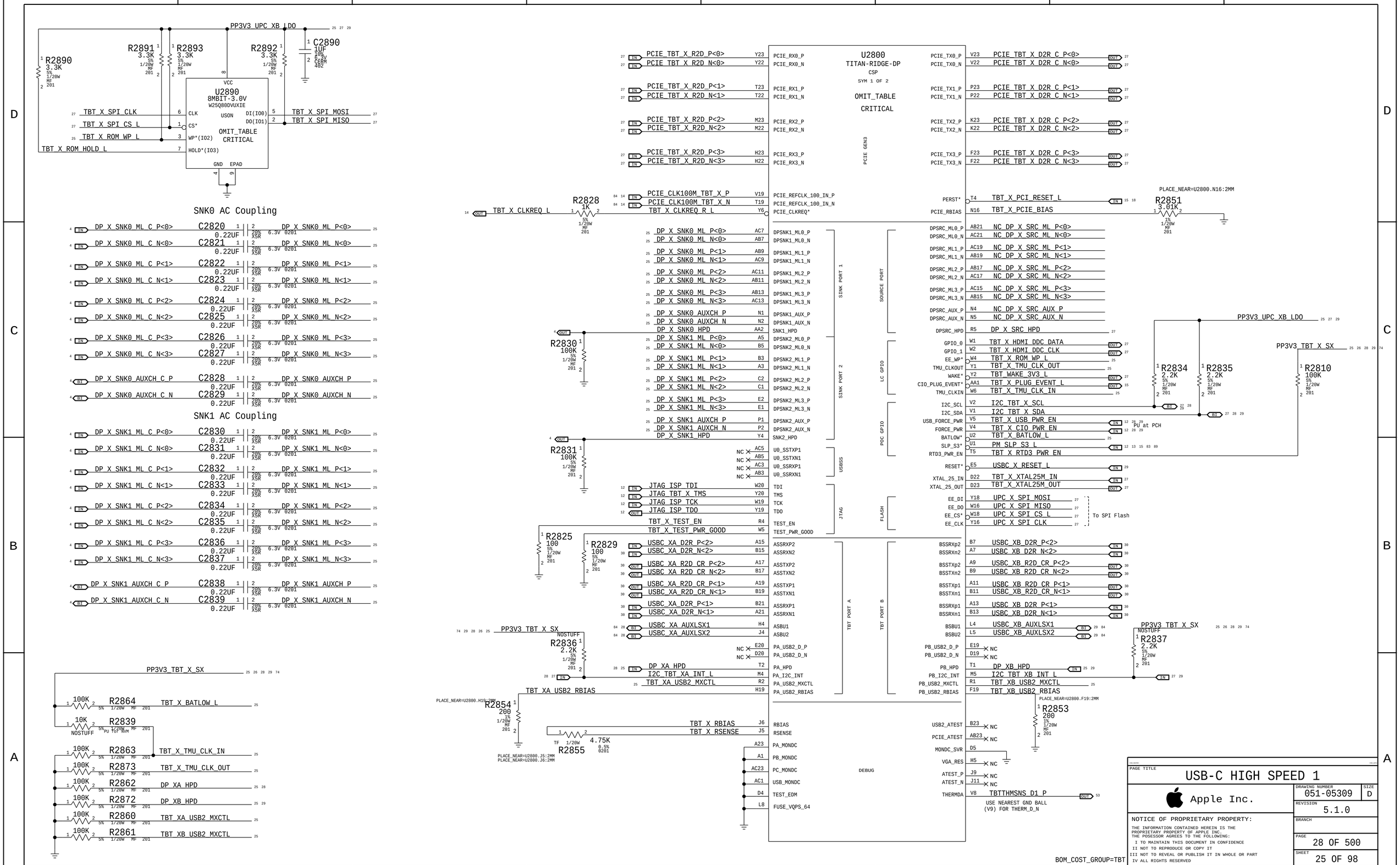

www.haojiyoubbs.com
QQ微信：181806465

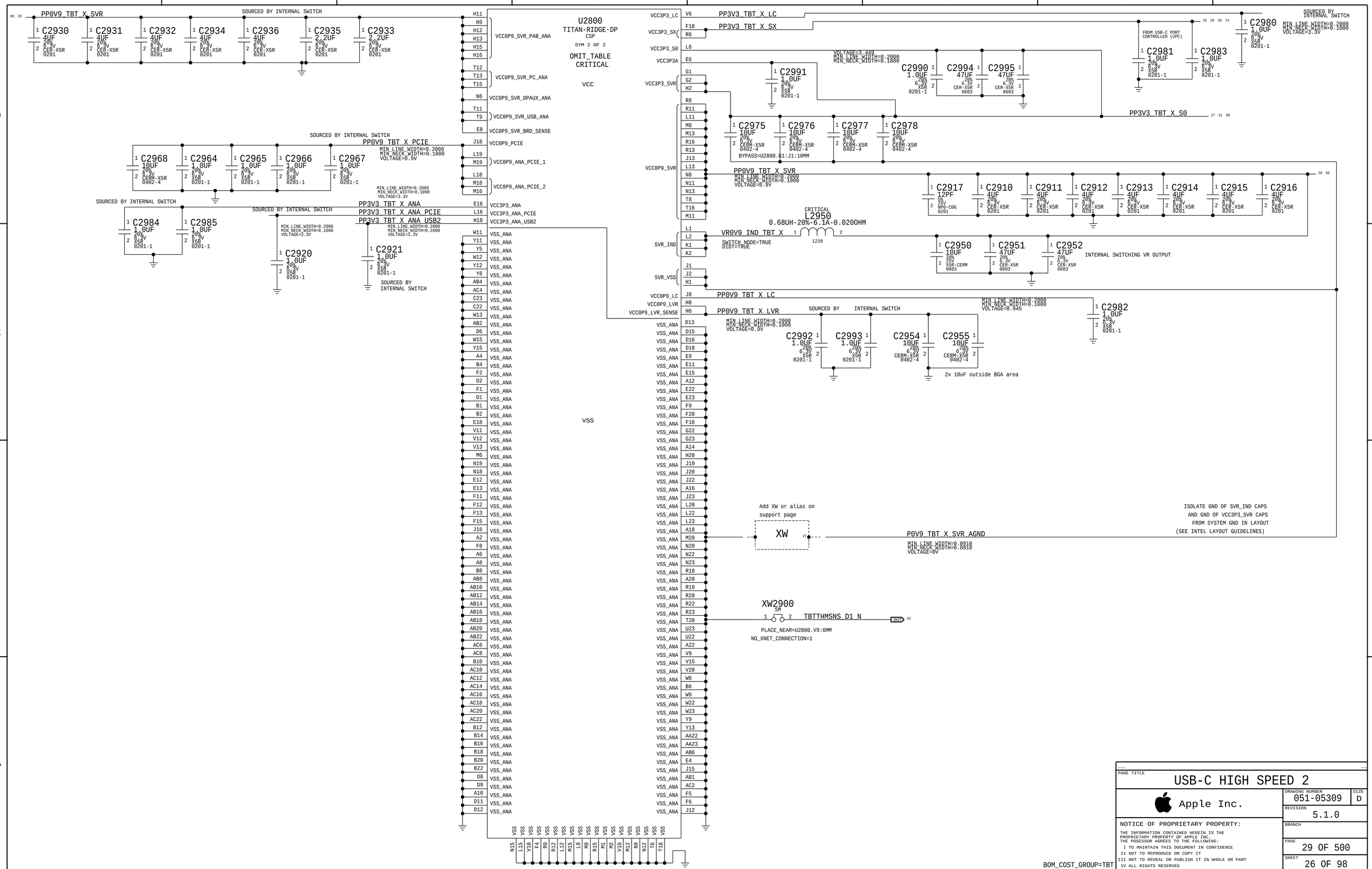

PAGE TITLE
USB-C HIGH SPEED 2

Apple Inc.

DRAWING NUMBER 051-05309
SIZE D
REVISION 5.1.0
BRANCH
PAGE 29 OF 500
SHEET 26 OF 98

NOTICE OF PROPRIETARY PROPERTY:
THE INFORMATION CONTAINED HEREIN IS THE PROPRIETARY PROPERTY OF APPLE INC.
THE POSESSOR AGREES TO THE FOLLOWING:
I TO MAINTAIN THIS DOCUMENT IN CONFIDENCE
II NOT TO REPRODUCE OR COPY IT
III NOT TO REVEAL OR PUBLISH IT IN WHOLE OR PART
IV ALL RIGHTS RESERVED

www.haojiyoubbs.com
QQ微信：181806465

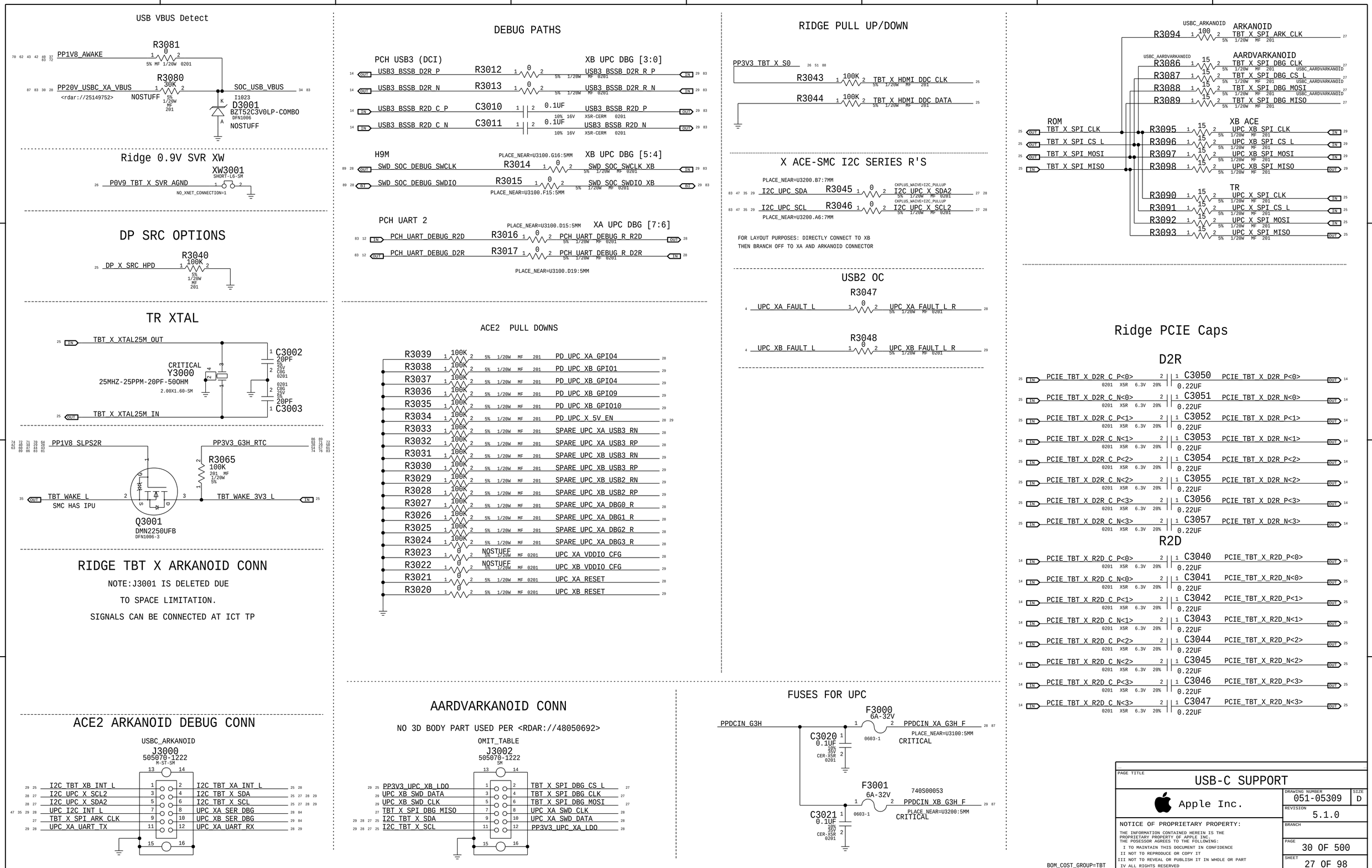

www.haojiyoubbs.com
QQ微信：181806465

PRIMARY USB-C PORT CONTROLLER (UPC) [FRONT LEFT]

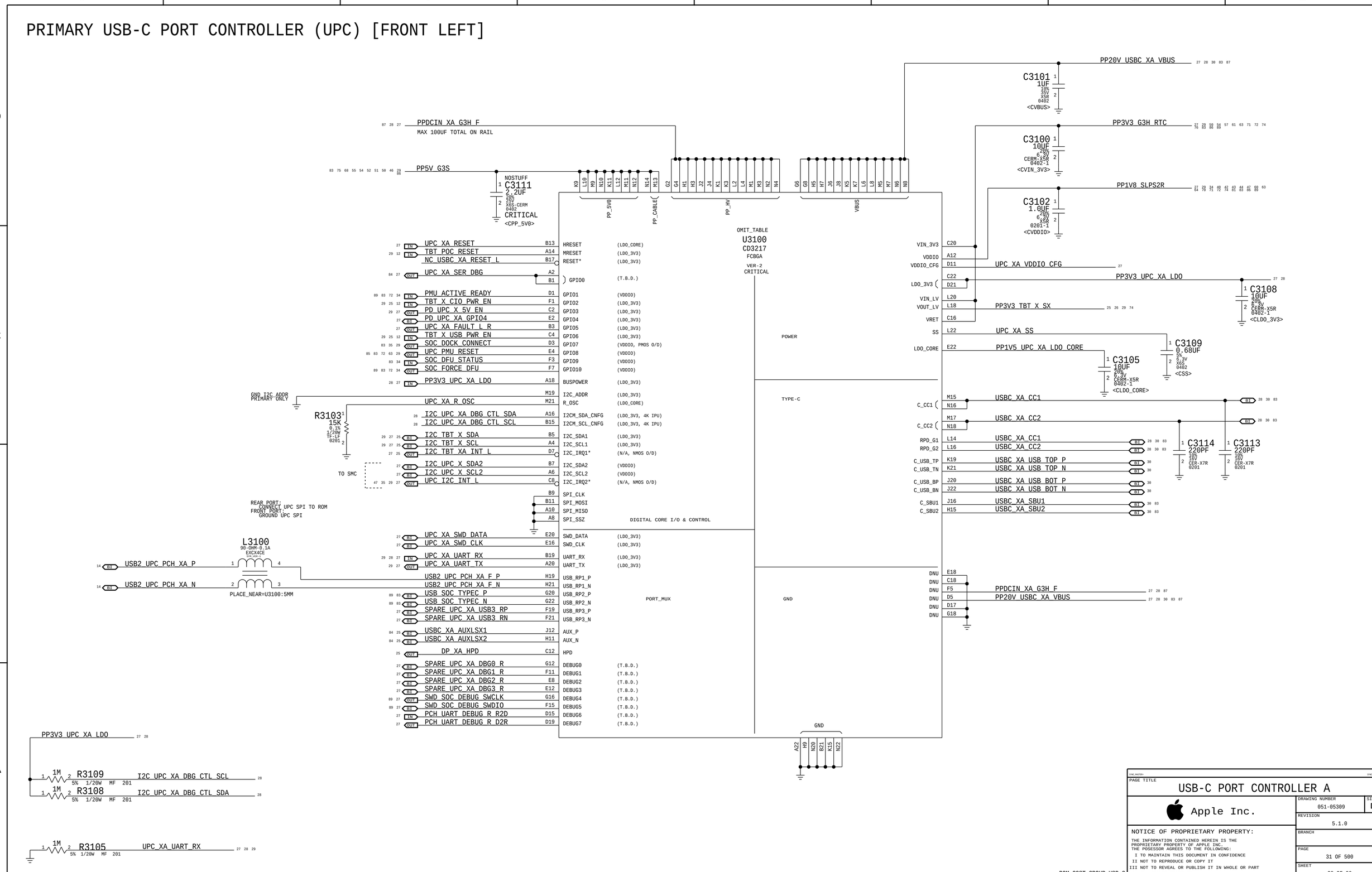

BOM_COST_GROUP=USB-C

PAGE TITLE
USB-C PORT CONTROLLER A

Apple Inc.

DRAWING NUMBER 051-05309
SIZE D
REVISION 5.1.0
BRANCH
PAGE 31 OF 500
SHEET 28 OF 98

NOTICE OF PROPRIETARY PROPERTY:
THE INFORMATION CONTAINED HEREIN IS THE PROPRIETARY PROPERTY OF APPLE INC.
THE POSESSOR AGREES TO THE FOLLOWING:
I TO MAINTAIN THIS DOCUMENT IN CONFIDENCE
II NOT TO REPRODUCE OR COPY IT
III NOT TO REVEAL OR PUBLISH IT IN WHOLE OR PART
IV ALL RIGHTS RESERVED

www.haojiyoubbs.com
QQ微信：181806465

SECONDARY USB-C PORT CONTROLLER (UPC) [REAR LEFT]

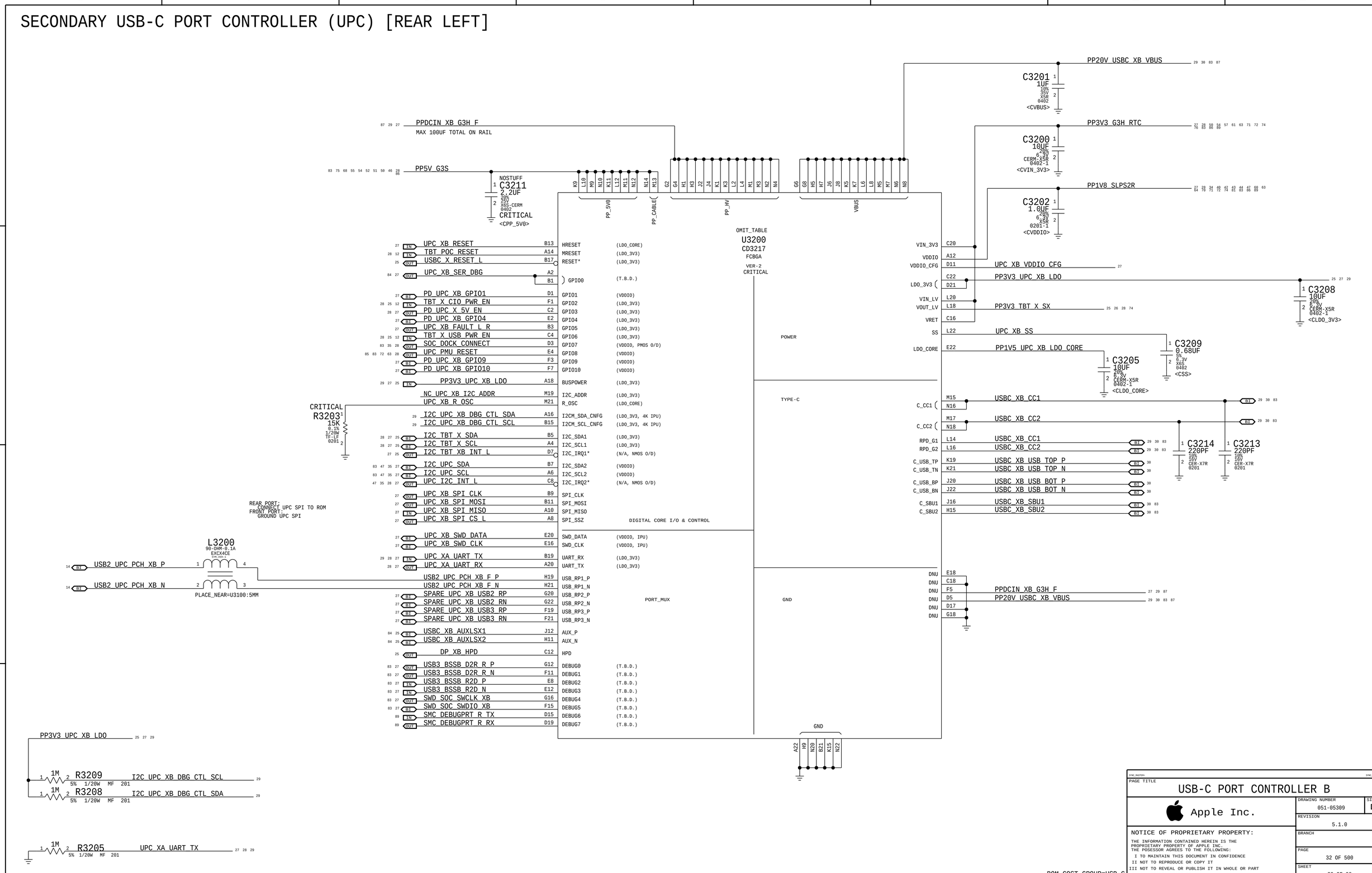

www.haojiyoubbs.com
QQ微信：181806465

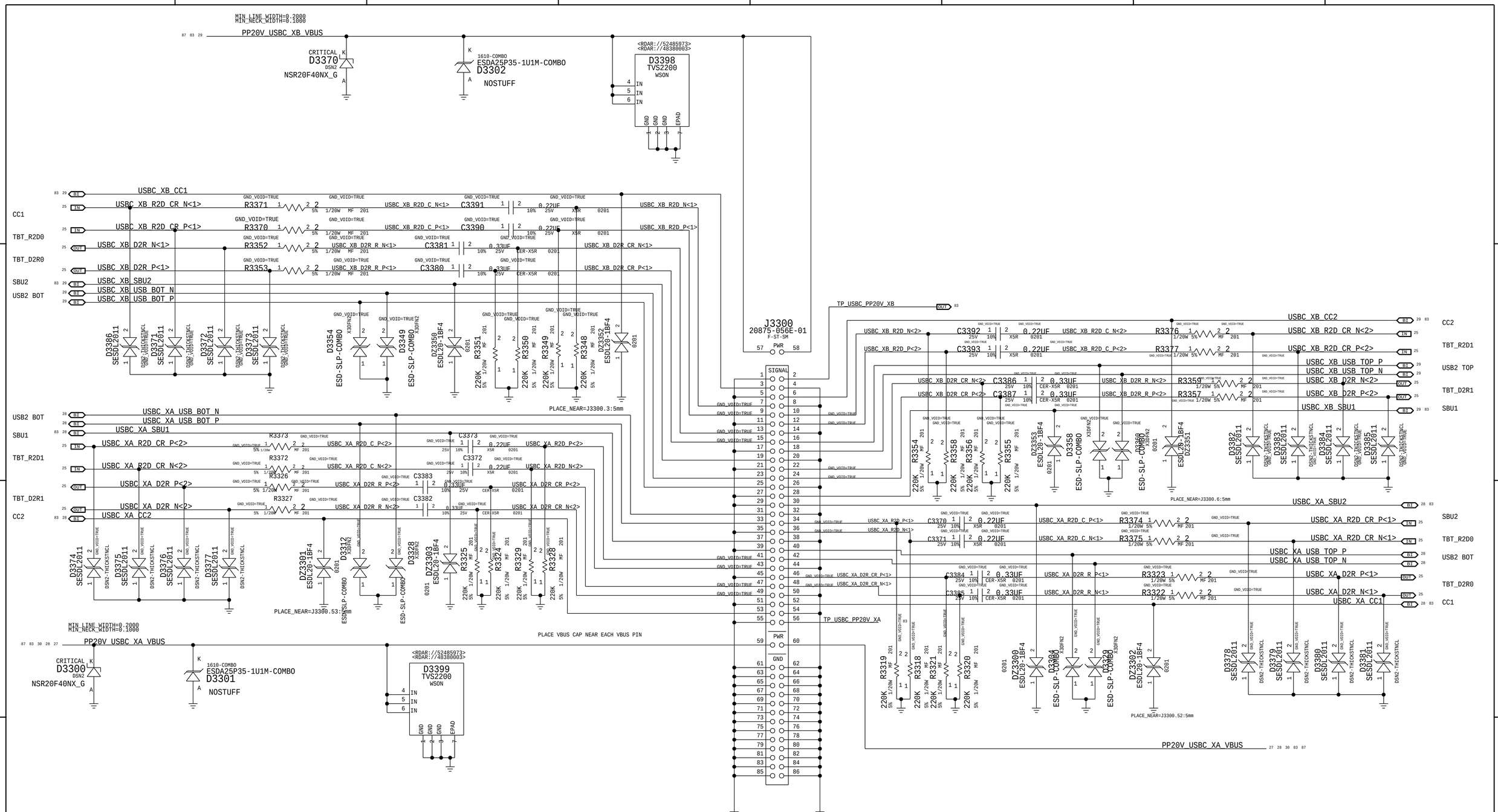

www.haojiyoubbs.com
QQ微信：181806465

BOM_COST_GROUP=WIRELESS

PAGE TITLE

WIFI/BT SUPPORT

Apple Inc.

DRAWING NUMBER	051-05309
SIZE	D
REVISION	5.1.0
BRANCH	
PAGE	36 OF 500
SHEET	31 OF 98

NOTICE OF PROPRIETARY PROPERTY:

THE INFORMATION CONTAINED HEREIN IS THE PROPRIETARY PROPERTY OF APPLE INC.
THE POSESSOR AGREES TO THE FOLLOWING:
I TO MAINTAIN THIS DOCUMENT IN CONFIDENCE
II NOT TO REPRODUCE OR COPY IT
III NOT TO REVEAL OR PUBLISH IT IN WHOLE OR PART
IV ALL RIGHTS RESERVED

www.haojiyoubbs.com
QQ微信：181806465

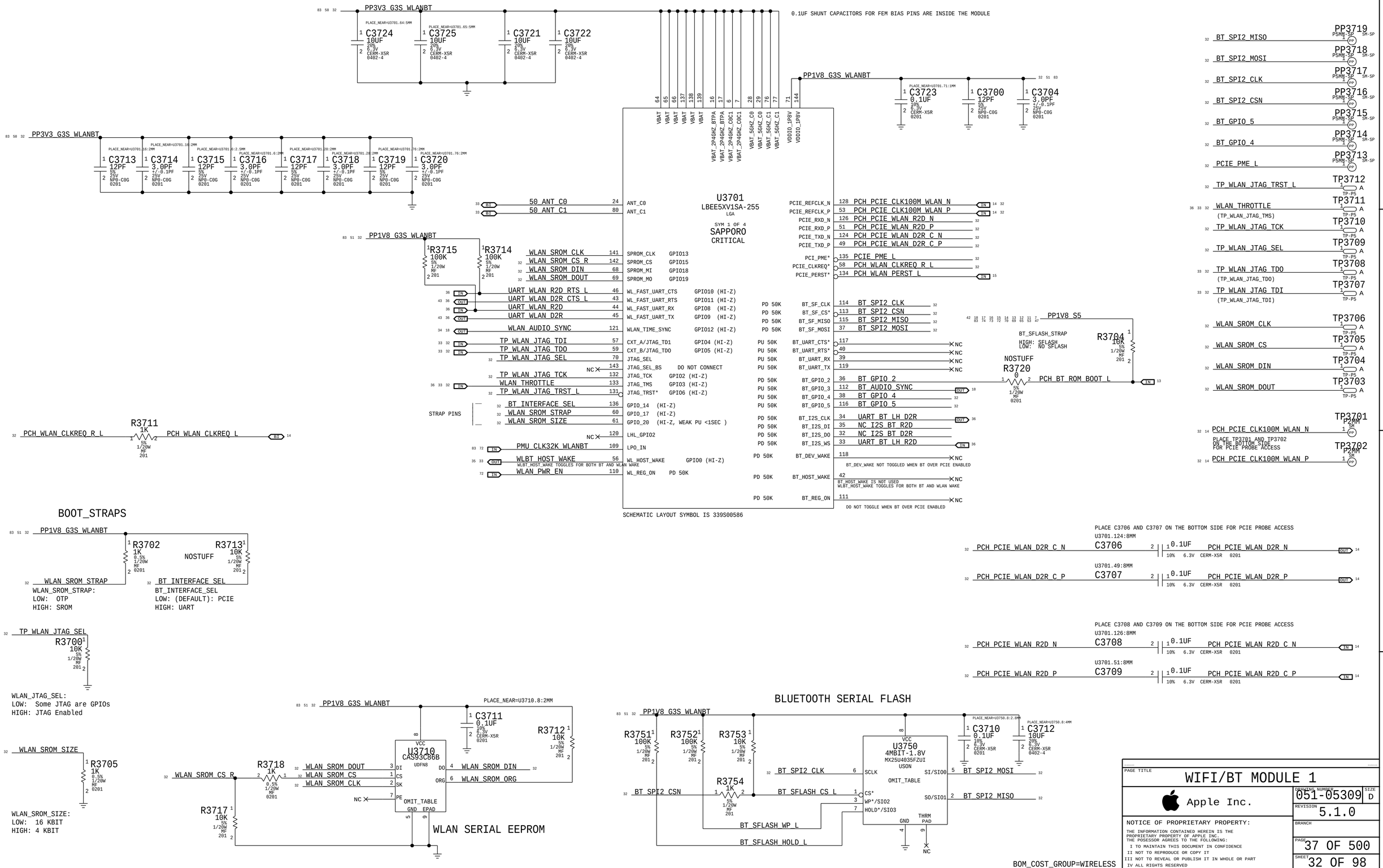

www.haojiyoubbs.com
QQ微信：181806465

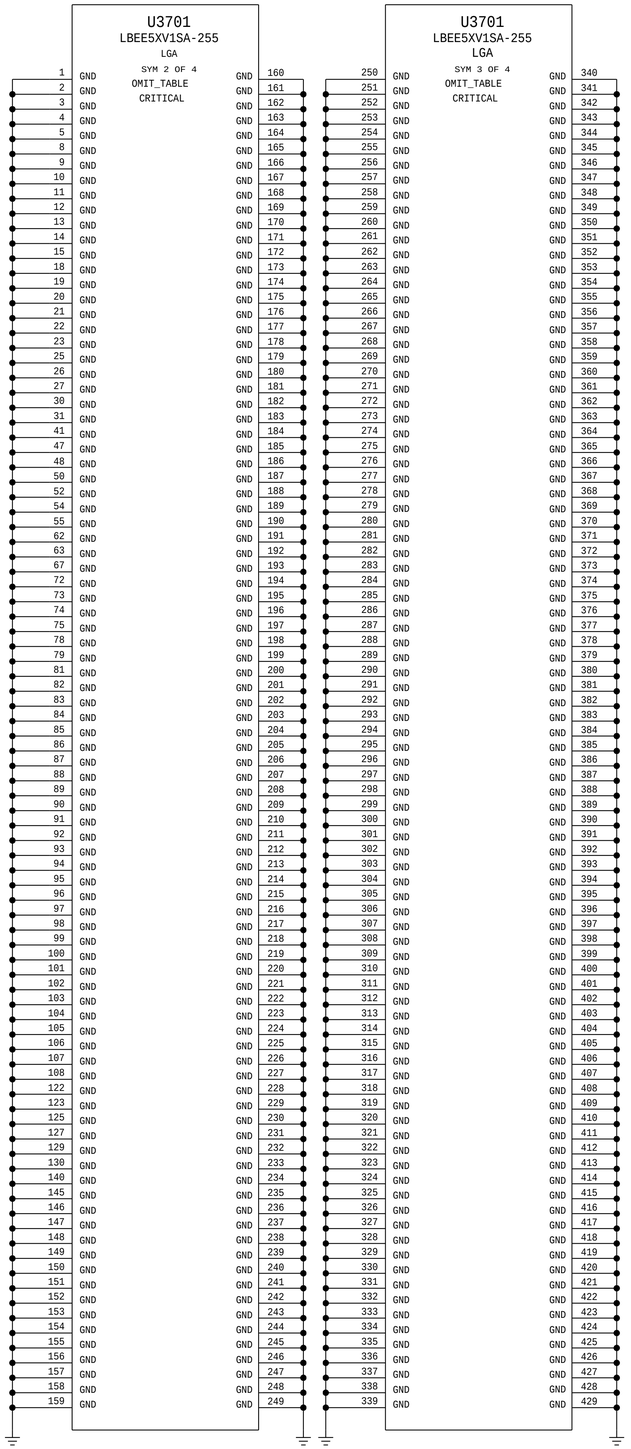

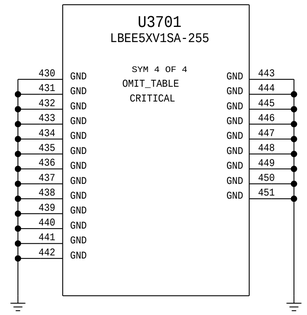

WIRELESS MODULE GND PINS

RF CONNECTORS

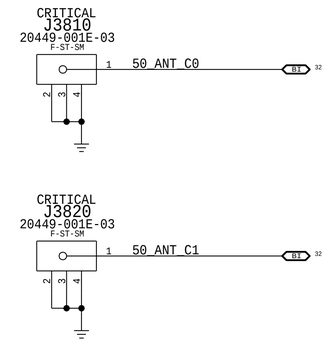

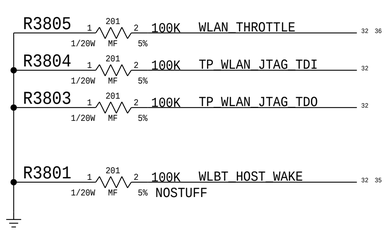

BOM_COST_GROUP=WIRELESS

PAGE TITLE
WIFI/BT MODULE 2

Apple Inc.

DRAWING NUMBER 051-05309 SIZE D
REVISION 5.1.0
BRANCH
PAGE 38 OF 500
SHEET 33 OF 98

NOTICE OF PROPRIETARY PROPERTY:
THE INFORMATION CONTAINED HEREIN IS THE PROPRIETARY PROPERTY OF APPLE INC. THE POSESSOR AGREES TO THE FOLLOWING:
I TO MAINTAIN THIS DOCUMENT IN CONFIDENCE
II NOT TO REPRODUCE OR COPY IT
III NOT TO REVEAL OR PUBLISH IT IN WHOLE OR PART
IV ALL RIGHTS RESERVED

www.haojiyoubbs.com
QQ微信：181806465

Note IPU/IPD represents SW configured state, not HW default

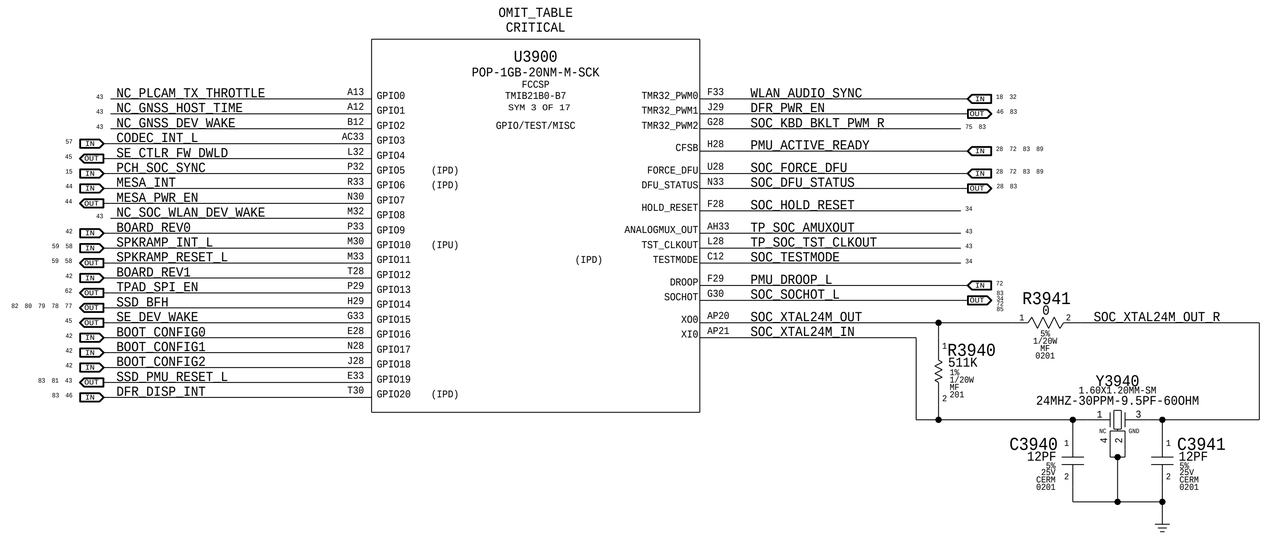

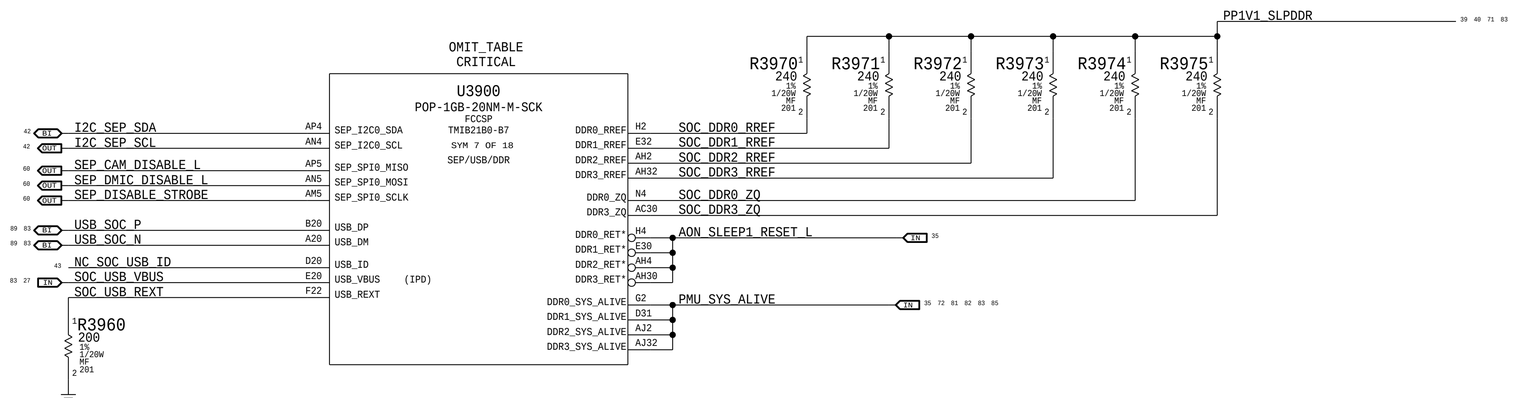

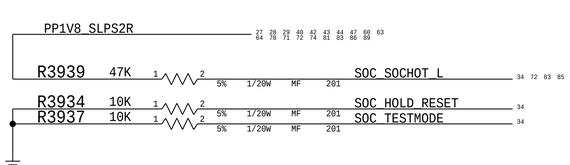

BOM_COST_GROUP=SOC

PAGE TITLE
SOC GPIO/SEP/USB/DDR/TEST

Apple Inc.

DRAWING NUMBER 051-05309 SIZE D
REVISION 5.1.0
BRANCH
PAGE 39 OF 500
SHEET 34 OF 98

NOTICE OF PROPRIETARY PROPERTY:
THE INFORMATION CONTAINED HEREIN IS THE PROPRIETARY PROPERTY OF APPLE INC.
THE POSESSOR AGREES TO THE FOLLOWING:
I TO MAINTAIN THIS DOCUMENT IN CONFIDENCE
II NOT TO REPRODUCE OR COPY IT
III NOT TO REVEAL OR PUBLISH IT IN WHOLE OR PART
IV ALL RIGHTS RESERVED

www.haojiyoubbs.com
QQ微信：181806465

OMIT_TABLE
CRITICAL

U3900
POP-1GB-20NM-M-SCK
FCCSP
TMIB21B0-B7
SYM 6 OF 17
AOP

43	NC_WLAN_CONTEXT_A	B5	AOP_FUNC[0]		AOP_PDM_CLK0	N6	PDM_DMIC_CLK0_R (OUT 43)
43	NC_WLAN_CONTEXT_B	D4	AOP_FUNC[1]		AOP_PDM_CLK1	J6	PDM_DMIC_CLK1_R (OUT 43)
84 43 (IN)	ACCEL_INT1	G1	AOP_FUNC[2]	(IPD)	AOP_PDM_CLK2 (IPU)	F5	TP_SMC_FIXTURE_MODE_L (83)
43 (IN)	ACCEL_INT2	C5	AOP_FUNC[3]	(IPD)	AOP_PDM_CLK3	F2	NC_PLCAM_PROX_INT_L (43)
45	SE_HOST_WAKE_R	D1	AOP_FUNC[4]		AOP_PDM_CLK4	J4	NC_PLCAM_ROMEO_B2B_DETECT (43)
85 15 (IN)	SOC_PERST_L	E4	AOP_FUNC[5]				
43	NC_ALTIMETER_INT	C4	AOP_FUNC[6]	(IPD)	AOP_PDM_DATA0	F1	PDM_DMIC_DATA0 (IN 60)
84 43 (OUT)	SPI_ACCEL_CS_L	F4	AOP_FUNC[7]	(IPD)	AOP_PDM_DATA1	J1	PDM_DMIC_DATA1 (IN 60)
43	NC_SPI_ALTIMETER_CS_L	E1	AOP_FUNC[8]		AOP_SPI_MOSI	A5	SPI_AOP_SENSOR_MOSI_R (OUT 43)
					AOP_SPI_SCLK	E5	SPI_AOP_SENSOR_CLK_R (OUT 43)
43	NC_I2C_AOP_SCL	H6	AOP_I2C0_SCL		AOP_SPI_MISO	C2	SPI_AOP_SENSOR_MISO (IN 43 84)
43	NC_I2C_AOP_SDA	G6	AOP_I2C0_SDA				

OMIT_TABLE
CRITICAL

U3900
POP-1GB-20NM-M-SCK
FCCSP
TMIB21B0-B7
SYM 5 OF 17
AON

83 46 (IN)	DFR_TOUCH_INT_L	AG6	AON_GPIO00		JTAG_TCK (IPU)	AF6	SWD_SOC_SWCLK (IN 89)
17 (IN)	CPU_SMC_THRMTRIP_L	AB6	AON_GPIO01	(IPU)	JTAG_TMS (IPU)	AH1	SWD_SOC_SWDIO (BI 89)
43	NC_SMC_GFX_SELF_THROTTLE	AL1	AON_GPIO02		JTAG_TDI (IPU)	AE6	DEBUG_JTAG_SOC_TDI (IN 83)
43	NC_SMC_TOPBLK_SWP_L	AH5	AON_GPIO03		JTAG_TDO	AK1	DEBUG_JTAG_SOC_TDO (OUT 83)
16 (IN)	XDP_PRESENT_L	AG1	AON_GPIO04		(IPD) JTAG_TRST*	AH6	TP_JTAG_SOC_TRST_L (83)
57 (OUT)	CODEC_RESET_L	AL4	AON_GPIO05		JTAG_SEL	Y8	SOC_JTAG_SEL (DAP=0, TAP=1) (35)
(OUT)	NC_BT_DEV_WAKE	AK4	AON_GPIO06				
43	NC_PCIEDN_WAKE_L	AD6	AON_GPIO07		DOCK_CONNECT	AJ5	SOC_DOCK_CONNECT (IN 28 29 35 83)
43	NC_ENET_LOW_PWR	AM1	AON_GPIO08		AON_SWD0_TMS	AF2	NC_SOC_WLAN_JTAG_TMS (43)
62 (IN)	TPAD_SPI_INT_L	AJ6	AON_GPIO09		AON_SWD1_TMS	AE4	NC_MESA_MENUKEY_L (43)
43	NC_SDCONN_STATE_CHANGE_L	AK5	AON_GPIO10		AON_SWD01_TCK	AE5	NC_SOC_WLAN_JTAG_TCK (43)
43	NC_ENET_MEDIA_SENSE	AJ1	AON_GPIO11				
72 (IN)	PMU_INT_L	AL6	AON_GPIO12	(IPU)	WDOG	AF5	SOC_WDOG (OUT 72 83 85)
					AON_SLEEP1_RESET*	AC6	AON_SLEEP1_RESET_L (OUT 34)
			AON_SPMI_SCLK				
			AON_SPMI_SDATA				
	SPMI_CLK_R	AA6					
	SPMI_DATA_R	AK2					
			RT_CLK32768				
83 72 (IN)	PMU_CLK32K_SOC	AK6					
83	SOC_COLD_RESET_L	AG4	COLD_RESET*				
		AF4	CFSB_AON				

72 (OUT) SPMI_CLK — R4036 20 1 2 5% 1/20W MF 201 — PLACE_NEAR=U3900.AA6:5MM
72 (BI) SPMI_DATA — R4037 20 1 2 5% 1/20W MF 201 — PLACE_NEAR=U7800.M7:5MM

85 83 72 60 (IN) PMU_COLD_RESET_L — R4039 1 2 4.7K 5% 1/20W MF 201

COLD_RESET and CFSB_AON requires isolation per <rdar://30222445>

OMIT_TABLE
CRITICAL

U3900
POP-1GB-20NM-M-SCK
FCCSP
TMIB21B0-B7
SYM 9 OF 17
SMC

PLACE_NEAR=U3900.R4:5MM
PLACE_NEAR=U3900.R1:5MM
PLACE_NEAR=U3900.T5:5MM
PLACE_NEAR=U3900.T6:5MM

12 (BI)	ESPI_IO<0> — R4050 20 1 2 5% 1/20W MF 201	ESPI_IO_R<0>	R4	SMC_ESPI_IO0		SMC_GPIO0	V4	CODEC_WAKE_L (IN 57)
12 (BI)	ESPI_IO<1> — R4051 20 1 2 5% 1/20W MF 201	ESPI_IO_R<1>	R1	SMC_ESPI_IO1	(IPD)	SMC_GPIO1	V8	NC_BT_HOST_WAKE (IN)
12 (BI)	ESPI_IO<2> — R4052 20 1 2 5% 1/20W MF 201	ESPI_IO_R<2>	T5	SMC_ESPI_IO2	(IPD)	SMC_GPIO2	V6	WLBT_HOST_WAKE (IN 32 33)
12 (BI)	ESPI_IO<3> — R4053 20 1 2 5% 1/20W MF 201	ESPI_IO_R<3>	T6	SMC_ESPI_IO3		SMC_GPIO3	U4	DP_INT_HPD_MASK (OUT 13 43)
		ESPI_CLK60M	P2	SMC_ESPI_CLK	(IPD)	SMC_GPIO4	V7	SMC_LID_RIGHT (IN 43 83)
12 (IN)		ESPI_CS_L	T4	SMC_ESPI_CS*		SMC_GPIO5	U6	NC_PCC_EVENT (43)
12 (IN)		ESPI_RESET_L	T2	SMC_ESPI_RESET*	(IPD)	SMC_GPIO6	V1	NC_TPAD_VIBE_L (43)
						SMC_GPIO7	W5	TPAD_KBD_WAKE_L (IN 62 83)
42 (IN)		SMC_PECI_RX	M6	SMC_PECI_IN	(IPD)	SMC_GPIO8	AC1	SMC_LID_LEFT (IN 43 83)
42 (OUT)		SMC_PECI_TX	R6	SMC_PECI_OUT		SMC_GPIO9	AB2	NC_SPI_DESCRIPTOR_OVERRIDE_L (43)
						SMC_GPIO10	AB1	NC_DISP_GCON_INT_L (43)
42 (OUT)		SMC_PCH_PWROK	U7	PCH_PWROK		SMC_GPIO11	AA4	NC_PCH_GCON_INT_L (43)
42 (OUT)		SMC_PCH_SYS_PWROK	U8	SYS_PWROK		SMC_GPIO12	W8	TPAD_ACTUATOR_DISABLE_L (BI 62)
42 18 (OUT)		SMC_RSMRST_L	U1	RSMRST*		SMC_GPIO13 (IPU)	AA1	TBT_WAKE_L (IN 27)
83 42 (OUT)		SMC_SYSRST_L	U5	SYS_RESET*		SMC_GPIO14 (IPU)	AC2	UPC_I2C_INT_L (IN 27 28 29 47)
89 83 72 18 (IN)		PM_SLP_S0_L	W1	SLP_S0B		SMC_GPIO_15 (IPU)	K2	DP_INT_HPD_L (IN 43)
65 43 42 (BI)		SMC_PROCHOT_L	P6	PROCHOT*				
85 83 82 81 72 34 (IN)		PMU_SYS_ALIVE	W6	SYS_ALIVE		SMC_ADC0	AE1	SMC_CPU_HS_ISENSE (IN 49)
						SMC_ADC1	Y5	SMC_PBUS_VSENSE (IN 49)
83 47 29 27 (OUT)		I2C_UPC_SCL	K4	SMC_I2C0_SCL		SMC_ADC2	AE2	SMC_BMON_ISENSE (IN 49)
83 47 29 27 (BI)		I2C_UPC_SDA	H1	SMC_I2C0_SDA		SMC_ADC3	AB5	SMC_DCIN_ISENSE (IN 49)
						SMC_ADC4	Y7	SMC_DCIN_VSENSE (IN 49)
47 (OUT)		I2C_SNS0_S0_SCL	L4	SMC_I2C1_SCL		SMC_ADC5	AD4	SMC_PP3V3_WLANBT_ISENSE (IN 50)
47 (BI)		I2C_SNS0_S0_SDA	L5	SMC_I2C1_SDA		SMC_ADC6	AF1	SMC_PP1V8_WLANBT_ISENSE (IN 51)
						SMC_ADC7	Y6	SMC_CALPE_ISENSE (IN 52)
47 (OUT)		I2C_THMSNS_SCL	M4	SMC_I2C2_SCL		REFP_ADC	AC5	PP1V25_SLPS2R_SMC_AVREF (42)
47 (BI)		I2C_THMSNS_SDA	K1	SMC_I2C2_SDA		REFM_ADC	AC4	GND_SMC_AVSS (42 49 50 51 52)
47 (OUT)		I2C_DISP_SCL	L2	SMC_I2C3_SCL		SMC_PWM0	E2	SMC_FAN_0_PWM (OUT 55)
47 (BI)		I2C_DISP_SDA	P5	SMC_I2C3_SDA		SMC_TACH0	K6	SMC_FAN_0_TACH (IN 55 60)
83 72 47 (OUT)		I2C_PWR_SCL	L1	SMC_I2C4_SCL		SMC_PWM1	N5	NC_SMC_FAN_1_PWM (43)
83 72 47 (BI)		I2C_PWR_SDA	M1	SMC_I2C4_SDA		SMC_TACH1	L6	NC_SMC_FAN_1_TACH (43)
47 (OUT)		I2C_SENSE_SCL	N1	SMC_I2C5_SCL		SMC_PWM2	K5	NC_SMC_LED_ONEWIRE (43)
47 (BI)		I2C_SENSE_SDA	N2	SMC_I2C5_SDA				
81 47 (OUT)		I2C_SSD_SCL	P1	SMC_I2C6_SCL	(IPU)	SMC_UART0_RXD	U2	SMC_DEBUGPRT_RX (IN 83 89)
81 47 (BI)		I2C_SSD_SDA	P4	SMC_I2C6_SDA		SMC_UART0_TXD	T1	SMC_DEBUGPRT_TX (OUT 83 89)
						SWD_OUT0_TCK	AB4	SSD0_SWCLK (OUT 77 78 79 80 82)
						SWD_OUT0_TMS	Y1	SSD0_SWDIO (BI 77 78 79 80 82)
						SWD_OUT1_TCK	AD1	NC_SSD1_SWCLK_UART_R2D (43)
						SWD_OUT1_TMS	W7	NC_SSD1_SWDIO_UART_D2R (43)

XW4089 (SM) — 1 PLACE_NEAR=U3900.AC4:4MM, 2

R4046 10K 1 2 — SOC_JTAG_SEL (35)
R4047 100K 1 2 5% 1/20W MF 201 — SOC_DOCK_CONNECT (28 29 35 83)

BOM_COST_GROUP=SOC

PAGE TITLE	SOC AOP/AON/SMC
Apple Inc.	DRAWING NUMBER 051-05309 — SIZE D
	REVISION 5.1.0
	BRANCH
	PAGE 40 OF 500
	SHEET 35 OF 98

NOTICE OF PROPRIETARY PROPERTY:
THE INFORMATION CONTAINED HEREIN IS THE PROPRIETARY PROPERTY OF APPLE INC.
THE POSESSOR AGREES TO THE FOLLOWING:
I TO MAINTAIN THIS DOCUMENT IN CONFIDENCE
II NOT TO REPRODUCE OR COPY IT
III NOT TO REVEAL OR PUBLISH IT IN WHOLE OR PART
IV ALL RIGHTS RESERVED

www.haojiyoubbs.com
QQ微信：181806465

OMIT_TABLE
CRITICAL

U3900
POP-1GB-20NM-M-SCK
FCCSP
TMIB21B0-B7
SYM 4 OF 17
ISP

84 76 IN	MIPI_FTCAM_DATA_P<0>	B24	MIPI0C_DATA0_P		
84 76 IN	MIPI_FTCAM_DATA_N<0>	A24	MIPI0C_DATA0_N		
		B22	MIPI0C_DATA1_P		
		A22	MIPI0C_DATA1_N		
84 76 IN	MIPI_FTCAM_CLK_P	B23	MIPI0C_CLK_P		
84 76 IN	MIPI_FTCAM_CLK_N	A23	MIPI0C_CLK_N		
		B25	MIPI1C_DATA0_P		
		A25	MIPI1C_DATA0_N		
		B27	MIPI1C_DATA1_P		
		A27	MIPI1C_DATA1_N		
		B26	MIPI1C_CLK_P		
		A26	MIPI1C_CLK_N		
46 OUT	MIPI_DFR_DATA_P	B30	MIPID_DATA0_P		
46 OUT	MIPI_DFR_DATA_N	A30	MIPID_DATA0_N		
46 OUT	MIPI_DFR_CLK_P	B29	MIPID_CLK_P		
46 OUT	MIPI_DFR_CLK_N	A29	MIPID_CLK_N		
	SOC_MIPI0C_REXT	F23	MIPI0C_REXT		
	SOC_MIPI1C_REXT	F25	MIPI1C_REXT		
	SOC_MIPID_REXT	F26	MIPID_REXT		
		AC28	ISP_I2C0_SDA		I2C_FTCAM_SDA — BI 48
		AD33	ISP_I2C0_SCL		I2C_FTCAM_SCL — OUT 48
		AA29	ISP_I2C1_SDA		NC_I2C_PLCAM_SDA — 43
		AD30	ISP_I2C1_SCL		NC_I2C_PLCAM_SCL — 43
		AF32	SENSOR0_CLK		NC_FTCAM_CLK12M_R — 43
		AF30	SENSOR0_RST		NC_FTCAM_RESET_L — 43
		AC29	SENSOR0_ISTRB		DFR_TOUCH_RESET_L — OUT 46 83
		AA28	SENSOR1_CLK		NC_PLCAM_RX_CLK12M_R — 43
		AB30	SENSOR1_RST		NC_PLCAM_RX_RESET_L — 43
		AA30	SENSOR1_ISTRB		DFR_DISP_RESET_L — OUT 46 83
		AB28	SENSOR2_CLK		NC_PLCAM_TX_CLK12M_R — 43
		AD28	SENSOR2_RST		NC_PLCAM_TX_RESET_L — 43
		W28	SENSOR_INT		NC_PLCAM_TX_INT — 43
		D33	DISP_TE (IPD)		DFR_DISP_TE — IN 46 83
		L30	DISP_VSYNC		BOARD_REV2 — IN 42
		AF29	CLK32K_OUT		DFR_TOUCH_CLK32K_RESET_L — OUT 46 83

[1]R4100 4.02K 1% 1/20W MF 201 — 2
[1]R4101 4.02K 1% 1/20W MF 201 — 2
[1]R4102 4.02K 1% 1/20W MF 201 — 2

PLACE_NEAR=U3900.F23:5MM
PLACE_NEAR=U3900.F25:5MM
PLACE_NEAR=U3900.F26:5MM

OMIT_TABLE
CRITICAL

U3900
POP-1GB-20NM-M-SCK
FCCSP
TMIB21B0-B7
SYM 2 OF 17
I2C/UART/SPI/I2S

58 48 BI	I2C_SPKRAMP_L_SDA	W33	I2C0_SDA		
58 48 OUT	I2C_SPKRAMP_L_SCL	U30	I2C0_SCL		
59 48 BI	I2C_SPKRAMP_R_SDA	AB32	I2C1_SDA		
59 48 OUT	I2C_SPKRAMP_R_SCL	V30	I2C1_SCL		
57 48 BI	I2C_CODEC_SDA	H30	I2C2_SDA		
57 48 OUT	I2C_CODEC_SCL	P28	I2C2_SCL		
48 BI	I2C_ALS_SDA	V28	I2C3_SDA		
48 OUT	I2C_ALS_SCL	AB33	I2C3_SCL		
48 BI	I2C_DFR_SDA	L33	I2C4_SDA		
48 OUT	I2C_DFR_SCL	R29	I2C4_SCL		
43	NC_I2C_SOC_5_SDA	M29	I2C5_SDA		
43	NC_I2C_SOC_5_SCL	R30	I2C5_SCL		
83 59 IN	SPKR_ID1	J33	I2C6_SDA	(IPU)	
83 58 IN	SPKR_ID0	L29	I2C6_SCL	(IPU)	
83	SOC_DEBUGPRT_RX	V32	UART0_RXD	(IPU)	
83	SOC_DEBUGPRT_TX	U32	UART0_TXD		
45 IN	UART_SE_D2R	B15	UART1_RXD		
45 OUT	UART_SE_R2D	A15	UART1_TXD		
45 IN	UART_SE_D2R_CTS_L	D13	UART1_CTS*		
45 OUT	UART_SE_R2D_RTS_L	E12	UART1_RTS*		
43	NC_UART_BT_D2R	F32	UART2_RXD		
43	NC_UART_BT_R2D	F30	UART2_TXD		
43	NC_UART_BT_D2R_CTS_L	M28	UART2_CTS*		
43	NC_UART_BT_R2D_RTS_L	K28	UART2_RTS*		
32 IN	UART_BT_LH_D2R	H32	UART3_RXD		
32 OUT	UART_BT_LH_R2D	J32	UART3_TXD		
43	NC_UART_GNSS_D2R_CTS_L	H33	UART3_CTS*		
43	NC_UART_GNSS_R2D_RTS_L	P30	UART3_RTS*		
43 32 IN	UART_WLAN_D2R	B14	UART4_RXD		
32 OUT	UART_WLAN_R2D	A14	UART4_TXD		
43 32 IN	UART_WLAN_D2R_CTS_L	C13	UART4_CTS*		
32 OUT	UART_WLAN_R2D_RTS_L	D12	UART4_RTS*		
		AN6	SPI0_MISO		SPI_SOCROM_MISO — IN 42
		AM4	SPI0_MOSI		SPI_SOCROM_MOSI_R — R4171 20 1 2 — SPI_SOCROM_MOSI — OUT 42
		AN3	SPI0_SCLK		SPI_SOCROM_CLK_R — R4172 20 1 2 5% 1/20W MF 201 — SPI_SOCROM_CLK — OUT 42
		AP6	SPI0_SSIN		SPI_SOCROM_CS_L — OUT 42
		K30	SPI1_MISO (IPU)		SPI_TPAD_MISO — IN 42 43
		J30	SPI1_MOSI		SPI_TPAD_MOSI_R — OUT 43
		K33	SPI1_SCLK		SPI_TPAD_CLK_R — OUT 43
		R28	SPI1_SSIN		SPI_TPAD_CS_L — OUT 62
		B17	SPI2_MISO		SPI_MESA_MISO — IN 44
		C17	SPI2_MOSI		SPI_MESA_MOSI_R — OUT 43
		D16	SPI2_SCLK		SPI_MESA_CLK_R — OUT 43
		A17	SPI2_SSIN		WLAN_THROTTLE — OUT 32 33
		C14	SPI3_MISO		SPI_DFR_MISO — IN 43
		D15	SPI3_MOSI		SPI_DFR_MOSI_R — OUT 43
		C16	SPI3_SCLK		SPI_DFR_CLK_R — OUT 43
		A16	SPI3_SSIN		SPI_DFR_CS_L — OUT 46 83
		Y28	I2S0_DIN (IPD)		I2S_SPKRAMP_L_D2R — IN 58 59
		AC32	I2S0_DOUT		I2S_SPKRAMP_L_R2D_R — OUT 43
		Y29	I2S0_BCLK		I2S_SPKRAMP_L_BCLK_R — OUT 43
		AE32	I2S0_LRCK		I2S_SPKRAMP_L_LRCLK — OUT 43
		AM33	I2S0_MCK		NC_DFR_TOUCH_RSVD — 43
		C18	I2S1_DIN		I2S_SPKRAMP_R_D2R — IN 43
		E17	I2S1_DOUT		I2S_SPKRAMP_R_R2D_R — OUT 43
		D17	I2S1_BCLK		I2S_SPKRAMP_R_BCLK_R — OUT 43
		B18	I2S1_LRCK		I2S_SPKRAMP_R_LRCLK — OUT 43
		D18	I2S1_MCK		NC_PCHROM_SW_EN — 43
		Y33	I2S2_DIN (IPD)		I2S_CODEC_D2R — IN 57
		AA33	I2S2_DOUT		I2S_CODEC_R2D_R — OUT 43
		AE33	I2S2_BCLK		I2S_CODEC_BCLK_R — OUT 43
		V29	I2S2_LRCK		I2S_CODEC_LRCLK — OUT 43
		AL30	I2S2_MCK		NC_I2S_CODEC_MCLK — 43
		R32	I2S3_DIN		NC_I2S_HAWKING_D2R — 43
		U33	I2S3_DOUT		NC_I2S_CODEC1_R2D_R — 43
		T33	I2S3_BCLK		NC_I2S_HAWKING_BCLK_R — 43
		U29	I2S3_LRCK		NC_I2S_HAWKING_LRCLK — 43
		V33	I2S3_MCK		NC_I2S_CODEC1_MCLK — 43

BOM_COST_GROUP=SOC

PAGE TITLE	SOC ISP/I2C/UART/SPI/I2S
Apple Inc.	DRAWING NUMBER 051-05309 — SIZE D
	REVISION 5.1.0
	BRANCH
	PAGE 41 OF 500
	SHEET 36 OF 98

NOTICE OF PROPRIETARY PROPERTY:
THE INFORMATION CONTAINED HEREIN IS THE PROPRIETARY PROPERTY OF APPLE INC.
THE POSESSOR AGREES TO THE FOLLOWING:
I TO MAINTAIN THIS DOCUMENT IN CONFIDENCE
II NOT TO REPRODUCE OR COPY IT
III NOT TO REVEAL OR PUBLISH IT IN WHOLE OR PART
IV ALL RIGHTS RESERVED

www.haojiyoubbs.com
QQ微信：181806465

OMIT_TABLE
CRITICAL

U3900
POP-1GB-20NM-M-SCK
FCCSP
TMIB21B0-B7
SYM 1 OF 17
PCIE UP/DN

14 OUT	PCIE SOC D2R P<0>	C4210 0.22UF 20% 6.3V X5R 0201	PCIE SOC D2R C P<0>	B10 PCIE_UP_TX0_P
14 OUT	PCIE SOC D2R N<0>	C4211 0.22UF 20% 6.3V X5R 0201	PCIE SOC D2R C N<0>	C10 PCIE_UP_TX0_N
			43 IN PCIE SOC R2D P<0>	E10 PCIE_UP_RX0_P
			43 IN PCIE SOC R2D N<0>	F10 PCIE_UP_RX0_N
14 OUT	PCIE SOC D2R P<1>	C4212 0.22UF 20% 6.3V X5R 0201	PCIE SOC D2R C P<1>	A9 PCIE_UP_TX1_P
14 OUT	PCIE SOC D2R N<1>	C4213 0.22UF 20% 6.3V X5R 0201	PCIE SOC D2R C N<1>	B9 PCIE_UP_TX1_N
			43 IN PCIE SOC R2D P<1>	D9 PCIE_UP_RX1_P
			43 IN PCIE SOC R2D N<1>	E9 PCIE_UP_RX1_N
14 OUT	PCIE SOC D2R P<2>	C4214 0.22UF 20% 6.3V X5R 0201	PCIE SOC D2R C P<2>	B8 PCIE_UP_TX2_P
14 OUT	PCIE SOC D2R N<2>	C4215 0.22UF 20% 6.3V X5R 0201	PCIE SOC D2R C N<2>	C8 PCIE_UP_TX2_N
			43 IN PCIE SOC R2D P<2>	E8 PCIE_UP_RX2_P
			43 IN PCIE SOC R2D N<2>	F8 PCIE_UP_RX2_N
14 OUT	PCIE SOC D2R P<3>	C4216 0.22UF 20% 6.3V X5R 0201	PCIE SOC D2R C P<3>	A7 PCIE_UP_TX3_P
14 OUT	PCIE SOC D2R N<3>	C4217 0.22UF 20% 6.3V X5R 0201	PCIE SOC D2R C N<3>	B7 PCIE_UP_TX3_N
			43 IN PCIE SOC R2D P<3>	D7 PCIE_UP_RX3_P
			43 IN PCIE SOC R2D N<3>	E7 PCIE_UP_RX3_N
14 OUT	SOC CLKREQ L	R4218 1K 5% 1/20W MF 201	SOC CLKREQ R L	A18 PCIE_UP_CLKREQ*
			84 14 IN PCIE CLK100M SOC P	G12 PCIE_UP_EXT_REFCLK_P
			84 14 IN PCIE CLK100M SOC N	G11 PCIE_UP_EXT_REFCLK_N
			SOC PCIE UP REXT	G10 PCIE_UP_REXT

PLACE_NEAR=U3900.G10:5MM
R4200 3.01K 1% 1/20W MF 201

PCIE_DN_TX0_P	AP28	NC PCIE WLAN R2D C P	43
PCIE_DN_TX0_N	AN28	NC PCIE WLAN R2D C N	43
PCIE_DN_RX0_P	AL28	NC PCIE WLAN D2R P	43
PCIE_DN_RX0_N	AK28	NC PCIE WLAN D2R N	43
PCIE_DN_TX1_P	AN27	NC PCIE ENET R2D C P	43
PCIE_DN_TX1_N	AM27	NC PCIE ENET R2D C N	43
PCIE_DN_RX1_P	AK27	NC PCIE ENET D2R P	43
PCIE_DN_RX1_N	AJ27	NC PCIE ENET D2R N	43
PCIE_DN_TX2_P	AP26	NC PCIE DN2 R2D C P	43
PCIE_DN_TX2_N	AN26	NC PCIE DN2 R2D C N	43
PCIE_DN_RX2_P	AL26	NC PCIE DN2 D2R P	43
PCIE_DN_RX2_N	AK26	NC PCIE DN2 D2R N	43
PCIE_DN_TX3_P	AN25	NC PCIE DN3 R2D C P	43
PCIE_DN_TX3_N	AM25	NC PCIE DN3 R2D C N	43
PCIE_DN_RX3_P	AK25	NC PCIE DN3 D2R P	43
PCIE_DN_RX3_N	AJ25	NC PCIE DN3 D2R N	43
PCIE_DN_REFCLK0_P	AK23	NC PCIE CLK100M WLAN P	43
PCIE_DN_REFCLK0_N	AL23	NC PCIE CLK100M WLAN N	43
PCIE_DN_CLKREQ0*	AG29	NC WLAN CLKREQ L	43
PCIE_DN_PERST0*	AJ33	NC WLAN PERST L	43
PCIE_DN_REFCLK1_P	AJ22	NC PCIE CLK100M ENET P	43
PCIE_DN_REFCLK1_N	AK22	NC PCIE CLK100M ENET N	43
PCIE_DN_CLKREQ1*	AG30	ENET CLKREQ L	37
PCIE_DN_PERST1*	AG33	NC ENET RESET L	43
PCIE_DN_REFCLK2_P	AN23	NC PCIE CLK100M DN2 P	43
PCIE_DN_REFCLK2_N	AP23	NC PCIE CLK100M DN2 N	43
PCIE_DN_CLKREQ2*	AD29	NC PCIEDN2 CLKREQ L	43
PCIE_DN_PERST2*	AH29	NC PCIEDN2 RESET L	43
PCIE_DN_REFCLK3_P	AM22	NC PCIE CLK100M DN3 P	43
PCIE_DN_REFCLK3_N	AN22	NC PCIE CLK100M DN3 N	43
PCIE_DN_CLKREQ3*	AF33	NC PCIEDN3 CLKREQ L	43
PCIE_DN_PERST3*	AE30	NC PCIEDN3 RESET L	43
PCIE_DN_EXT_REFCLK_P	AH25		
PCIE_DN_EXT_REFCLK_N	AH24		
PCIE_DN_REXT	AH23	SOC PCIE DN REXT	

(UID_MODE strap on A00)

PLACE_NEAR=U3900.AH23:5MM
R4201 3.01K 1% 1/20W MF 201

OMIT_TABLE
CRITICAL

U3900
POP-1GB-20NM-M-SCK
FCCSP
TMIB21B0-B7
SYM 8 OF 17
PCIE STG 0/1

77 OUT	PCIE SSD0 R2D C P<0>	PCIE_STG0_TX0_P	AN8
77 OUT	PCIE SSD0 R2D C N<0>	PCIE_STG0_TX0_N	AM8
84 77 IN	PCIE SSD0 D2R P<0>	PCIE_STG0_RX0_P	AK8
84 77 IN	PCIE SSD0 D2R N<0>	PCIE_STG0_RX0_N	AJ8
78 OUT	PCIE SSD0 R2D C P<1>	PCIE_STG0_TX1_P	AP9
78 OUT	PCIE SSD0 R2D C N<1>	PCIE_STG0_TX1_N	AN9
78 IN	PCIE SSD0 D2R P<1>	PCIE_STG0_RX1_P	AL9
78 IN	PCIE SSD0 D2R N<1>	PCIE_STG0_RX1_N	AK9
79 OUT	PCIE SSD0 R2D C P<2>	PCIE_STG0_TX2_P	AN10
79 OUT	PCIE SSD0 R2D C N<2>	PCIE_STG0_TX2_N	AM10
79 IN	PCIE SSD0 D2R P<2>	PCIE_STG0_RX2_P	AK10
79 IN	PCIE SSD0 D2R N<2>	PCIE_STG0_RX2_N	AJ10
80 OUT	PCIE SSD0 R2D C P<3>	PCIE_STG0_TX3_P	AP11
80 OUT	PCIE SSD0 R2D C N<3>	PCIE_STG0_TX3_N	AN11
80 IN	PCIE SSD0 D2R P<3>	PCIE_STG0_RX3_P	AL11
80 IN	PCIE SSD0 D2R N<3>	PCIE_STG0_RX3_N	AK11
84 78 77 OUT	PCIE CLK100M SSD0 01 P	PCIE_STG0_REFCLK01_P	AK18
84 78 77 OUT	PCIE CLK100M SSD0 01 N	PCIE_STG0_REFCLK01_N	AL18
77 43 IN	SSD0 CLKREQ0 L	PCIE_STG0_CLKREQ0*	AM30
78 43 IN	SSD0 CLKREQ1 L	PCIE_STG0_CLKREQ1*	AK30
84 80 79 OUT	PCIE CLK100M SSD0 23 P	PCIE_STG0_REFCLK23_P	AJ19
84 80 79 OUT	PCIE CLK100M SSD0 23 N	PCIE_STG0_REFCLK23_N	AK19
79 43 IN	SSD0 CLKREQ2 L	PCIE_STG0_CLKREQ2*	AL33
80 43 IN	SSD0 CLKREQ3 L	PCIE_STG0_CLKREQ3*	AK33
80 79 78 77 43 OUT	SSD0 PCIE RESET L	PCIE_STG0_PERST*	AM32
43 OUT	SSD0 CLK24M R	PCIE_STG0_NANDCLK	AM6
		PCIE_STG0_EXT_REFCLK_P	AH12
		PCIE_STG0_EXT_REFCLK_N	AH13
	SOC PCIE STG0 REXT	PCIE_STG0_REXT	AH14

PCIE_STG1_TX0_P	AN13	NC PCIE SSD1 R2D C P<0>	43
PCIE_STG1_TX0_N	AM13	NC PCIE SSD1 R2D C N<0>	43
PCIE_STG1_RX0_P	AK13	NC PCIE SSD1 D2R P<0>	43
PCIE_STG1_RX0_N	AJ13	NC PCIE SSD1 D2R N<0>	43
PCIE_STG1_TX1_P	AP14	NC PCIE SSD1 R2D C P<1>	43
PCIE_STG1_TX1_N	AN14	NC PCIE SSD1 R2D C N<1>	43
PCIE_STG1_RX1_P	AL14	NC PCIE SSD1 D2R P<1>	43
PCIE_STG1_RX1_N	AK14	NC PCIE SSD1 D2R N<1>	43
PCIE_STG1_TX2_P	AN15	NC PCIE SSD1 R2D C P<2>	43
PCIE_STG1_TX2_N	AM15	NC PCIE SSD1 R2D C N<2>	43
PCIE_STG1_RX2_P	AK15	NC PCIE SSD1 D2R P<2>	43
PCIE_STG1_RX2_N	AJ15	NC PCIE SSD1 D2R N<2>	43
PCIE_STG1_TX3_P	AP16	NC PCIE SSD1 R2D C P<3>	43
PCIE_STG1_TX3_N	AN16	NC PCIE SSD1 R2D C N<3>	43
PCIE_STG1_RX3_P	AL16	NC PCIE SSD1 D2R P<3>	43
PCIE_STG1_RX3_N	AK16	NC PCIE SSD1 D2R N<3>	43
PCIE_STG1_REFCLK01_P	AN18	NC PCIE CLK100M SSD1 01 P	43
PCIE_STG1_REFCLK01_N	AP18	NC PCIE CLK100M SSD1 01 N	43
PCIE_STG1_CLKREQ0*	C15	NC SSD1 CLKREQ0 L	43
PCIE_STG1_CLKREQ1*	E15	NC SSD1 CLKREQ1 L	43
PCIE_STG1_REFCLK23_P	AM19	NC PCIE CLK100M SSD1 23 P	43
PCIE_STG1_REFCLK23_N	AN19	NC PCIE CLK100M SSD1 23 N	43
PCIE_STG1_CLKREQ2*	E14	NC SSD1 CLKREQ2 L	43
PCIE_STG1_CLKREQ3*	D14	NC SSD1 CLKREQ3 L	43
PCIE_STG1_PERST*	AK32	NC SSD1 PCIE RESET L	43
PCIE_STG1_NANDCLK	AM2	NC SSD1 CLK24M R	43
PCIE_STG1_EXT_REFCLK_P	AH17		
PCIE_STG1_EXT_REFCLK_N	AH18		
PCIE_STG1_REXT	AH19	SOC PCIE STG1 REXT	

PLACE_NEAR=U3900.AH14:5MM
R4250 3.01K 1% 1/20W MF 201

PLACE_NEAR=U3900.AH19:5MM
R4251 3.01K 1% 1/20W MF 201

PP1V8_AWAKE 27 40 42 43 62 78 72 83
R4232 47K 5% 1/20W MF 201 ENET_CLKREQ_L 37

BOM_COST_GROUP=SOC

PAGE TITLE
SOC PCIE

Apple Inc.

DRAWING NUMBER 051-05309 SIZE D
REVISION 5.1.0
BRANCH
PAGE 42 OF 500
SHEET 37 OF 98

NOTICE OF PROPRIETARY PROPERTY:
THE INFORMATION CONTAINED HEREIN IS THE PROPRIETARY PROPERTY OF APPLE INC.
THE POSESSOR AGREES TO THE FOLLOWING:
I TO MAINTAIN THIS DOCUMENT IN CONFIDENCE
II NOT TO REPRODUCE OR COPY IT
III NOT TO REVEAL OR PUBLISH IT IN WHOLE OR PART
IV ALL RIGHTS RESERVED

www.haojiyoubbs.com
QQ微信：181806465

Current estimates @ 105C & 2GB from Gibraltar Power Specification Rev 0.5.3

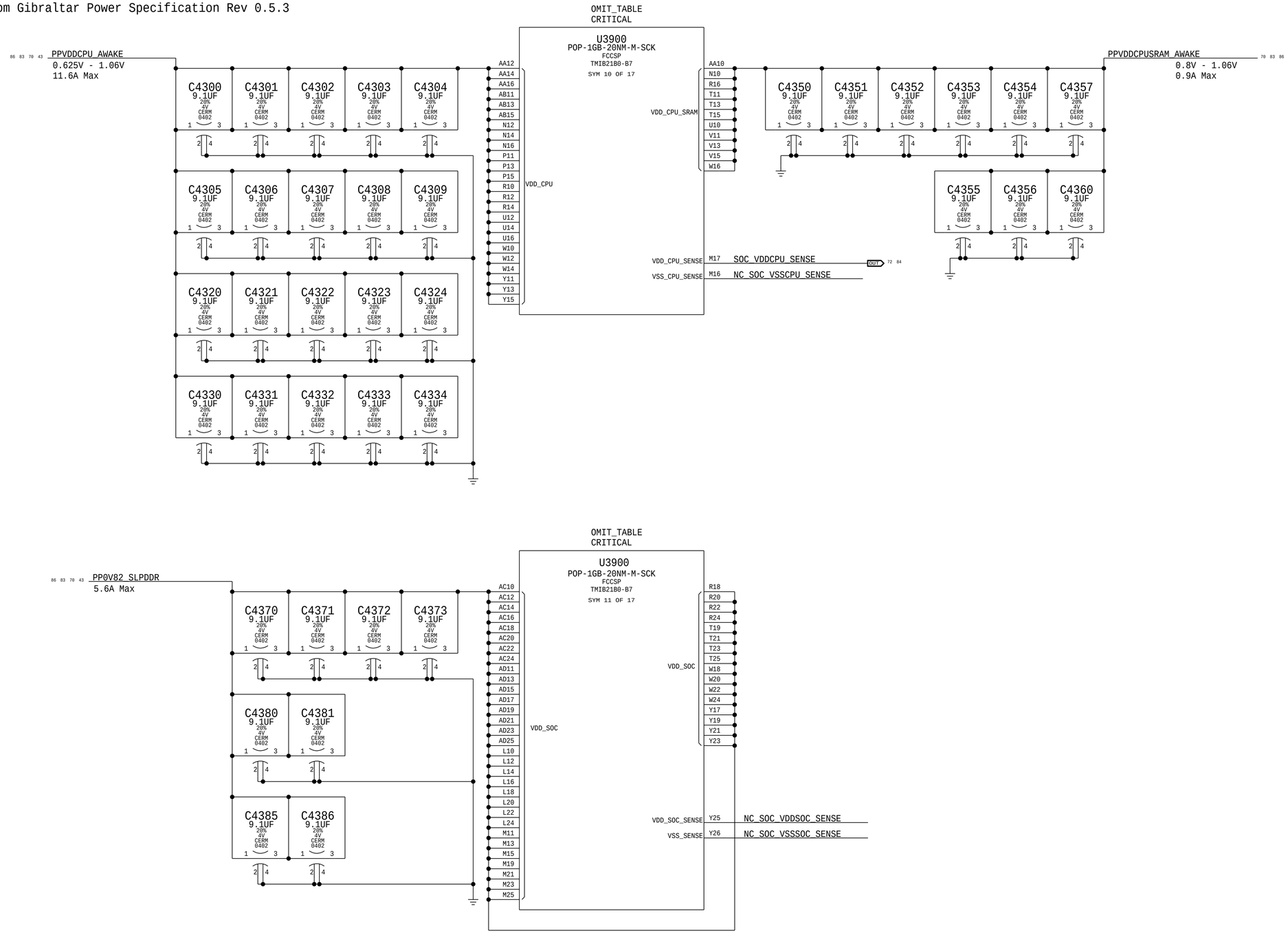

BOM_COST_GROUP=SOC

PAGE TITLE
SOC POWER 1

Apple Inc.

DRAWING NUMBER 051-05309
SIZE D
REVISION 5.1.0
BRANCH
PAGE 43 OF 500
SHEET 38 OF 98

NOTICE OF PROPRIETARY PROPERTY:
THE INFORMATION CONTAINED HEREIN IS THE PROPRIETARY PROPERTY OF APPLE INC.
THE POSESSOR AGREES TO THE FOLLOWING:
I TO MAINTAIN THIS DOCUMENT IN CONFIDENCE
II NOT TO REPRODUCE OR COPY IT
III NOT TO REVEAL OR PUBLISH IT IN WHOLE OR PART
IV ALL RIGHTS RESERVED

www.haojiyoubbs.com
QQ微信：181806465

Current estimates @ 105C & 2GB from Gibraltar Power Specification Rev 0.5.3

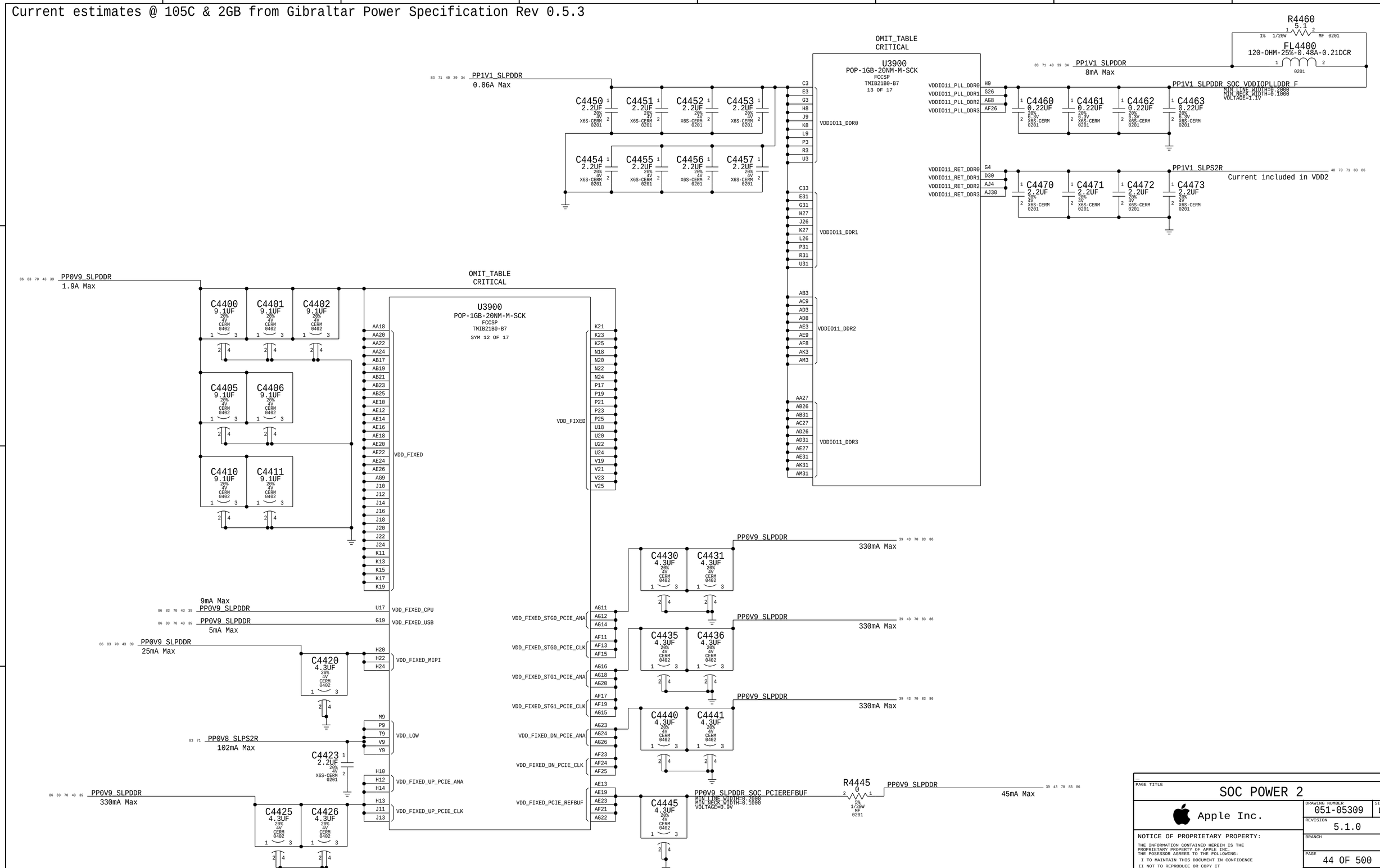

BOM_COST_GROUP=SOC

PAGE TITLE	SOC POWER 2
Apple Inc.	DRAWING NUMBER 051-05309 SIZE D
	REVISION 5.1.0
NOTICE OF PROPRIETARY PROPERTY: THE INFORMATION CONTAINED HEREIN IS THE PROPRIETARY PROPERTY OF APPLE INC. THE POSESSOR AGREES TO THE FOLLOWING: I TO MAINTAIN THIS DOCUMENT IN CONFIDENCE II NOT TO REPRODUCE OR COPY IT III NOT TO REVEAL OR PUBLISH IT IN WHOLE OR PART IV ALL RIGHTS RESERVED	BRANCH
	PAGE 44 OF 500
	SHEET 39 OF 98

www.haojiyoubbs.com
QQ微信：181806465

Current estimates @ 105C & 2GB from Gibraltar Power Specification Rev 0.5.3

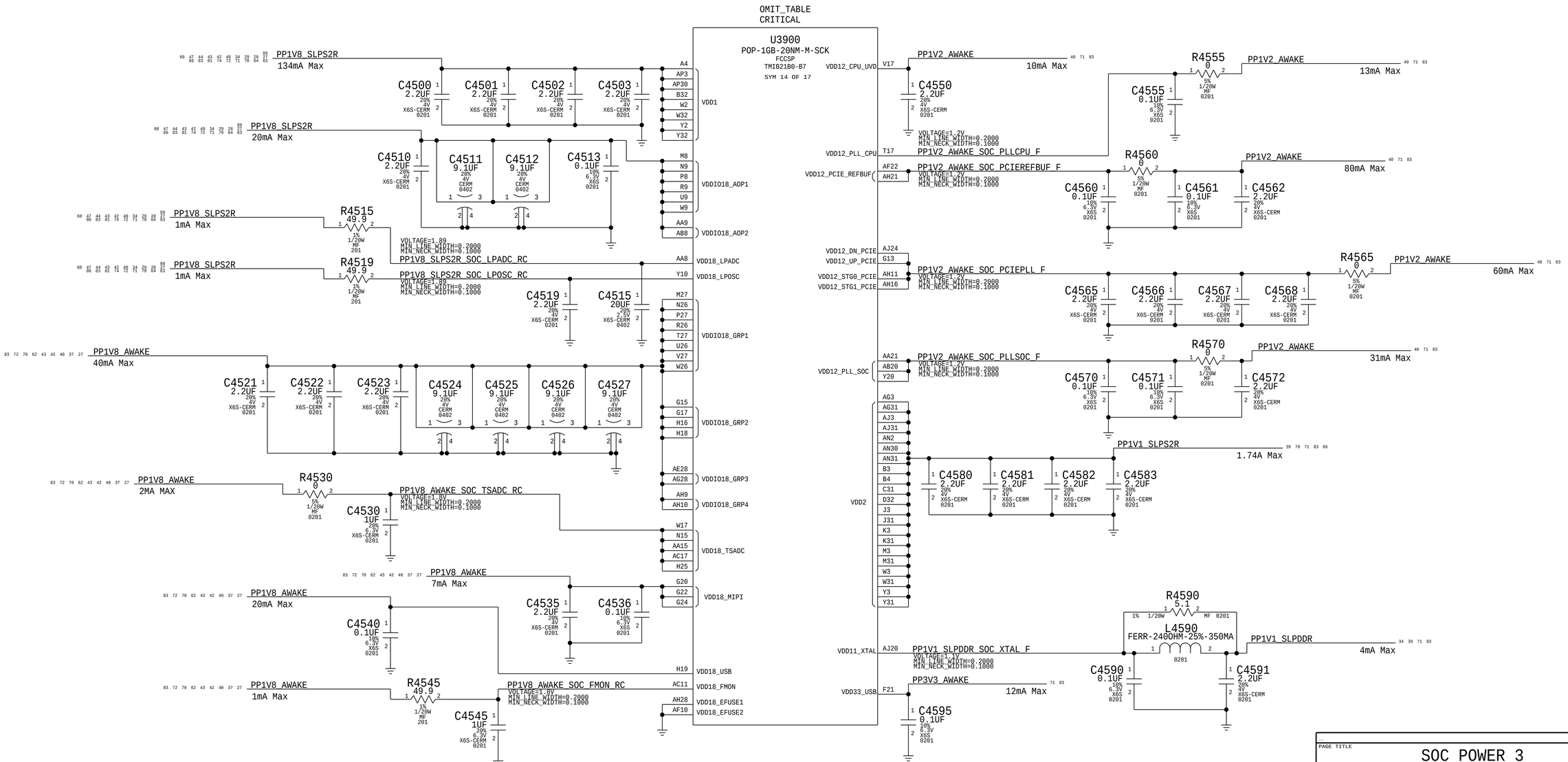

PAGE TITLE
SOC POWER 3

Apple Inc.

DRAWING NUMBER 051-05309
SIZE D
REVISION 5.1.0
BRANCH
PAGE 45 OF 500
SHEET 40 OF 98

NOTICE OF PROPRIETARY PROPERTY:
THE INFORMATION CONTAINED HEREIN IS THE PROPRIETARY PROPERTY OF APPLE INC.
THE POSESSOR AGREES TO THE FOLLOWING:
I TO MAINTAIN THIS DOCUMENT IN CONFIDENCE
II NOT TO REPRODUCE OR COPY IT
III NOT TO REVEAL OR PUBLISH IT IN WHOLE OR PART
IV ALL RIGHTS RESERVED

www.haojiyoubbs.com
QQ微信：181806465

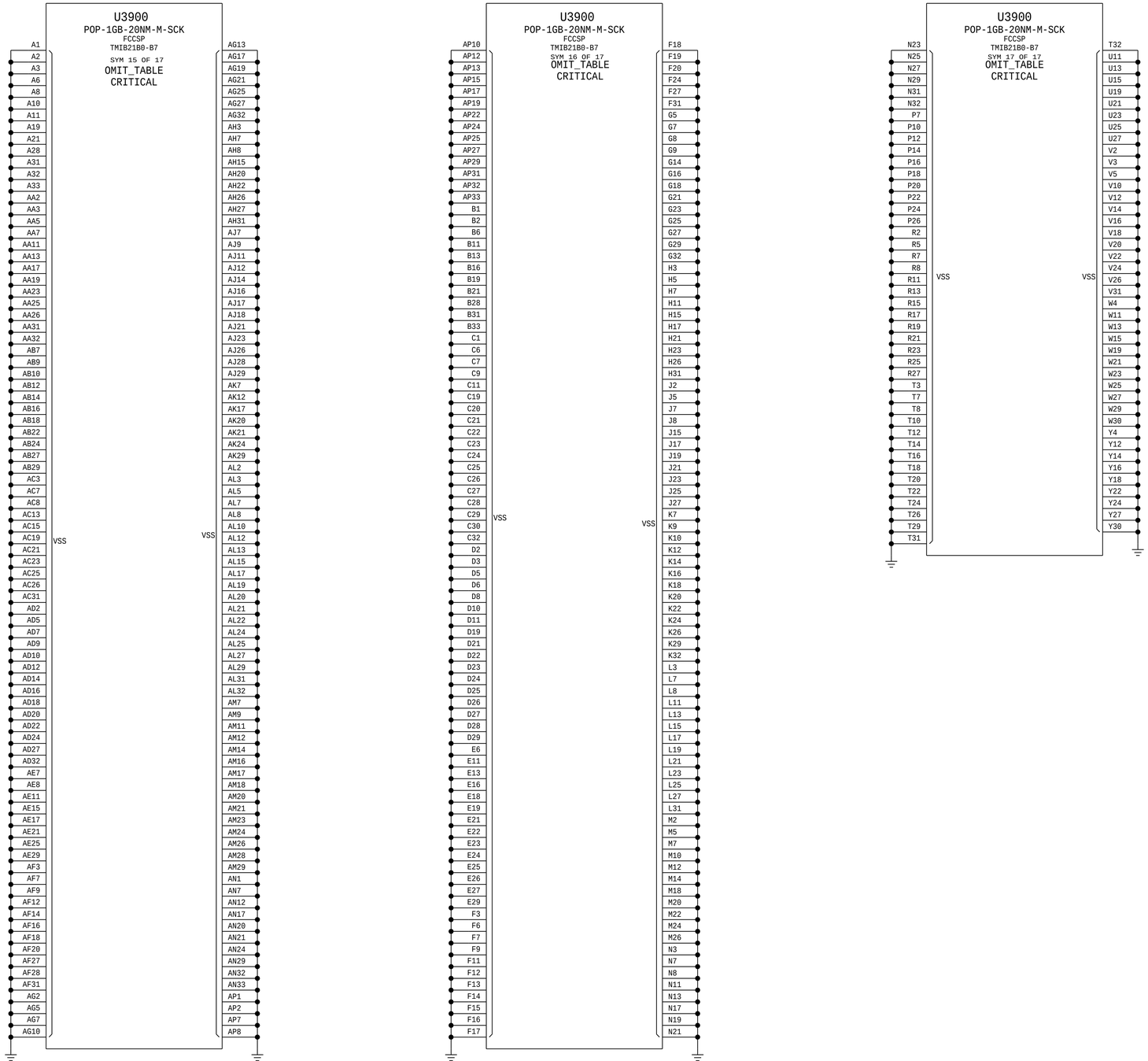

BOM_COST_GROUP=SOC

PAGE TITLE
SOC GROUND

Apple Inc.

DRAWING NUMBER 051-05309
SIZE D
REVISION 5.1.0
BRANCH
PAGE 46 OF 500
SHEET 41 OF 98

NOTICE OF PROPRIETARY PROPERTY:
THE INFORMATION CONTAINED HEREIN IS THE PROPRIETARY PROPERTY OF APPLE INC.
THE POSESSOR AGREES TO THE FOLLOWING:
I TO MAINTAIN THIS DOCUMENT IN CONFIDENCE
II NOT TO REPRODUCE OR COPY IT
III NOT TO REVEAL OR PUBLISH IT IN WHOLE OR PART
IV ALL RIGHTS RESERVED

www.haojiyoubbs.com
QQ微信：181806465

Boot Config

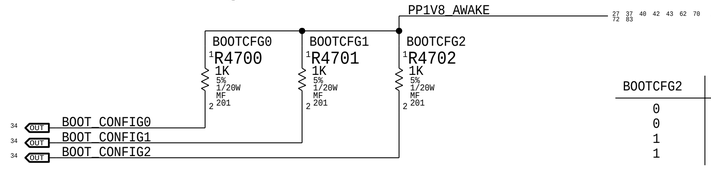

BOOTCFG0	Test Mode
0	Disabled
1	Enabled

BOOTCFG2	BOOTCFG1	Frequency
0	0	40 MHz
0	1	6 MHz
1	0	24 MHz
1	1	Invalid

Board ID

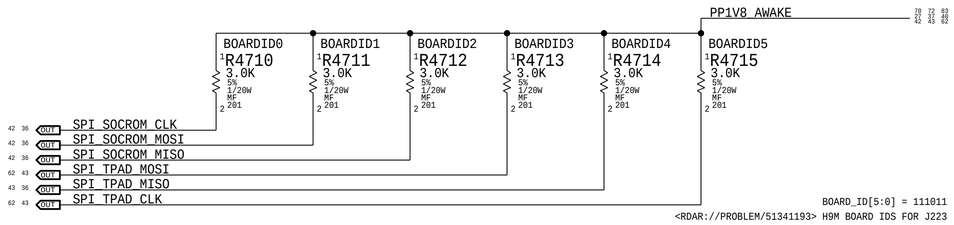

Board Revision

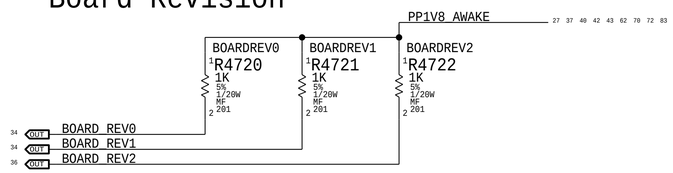

BUILD	BOARDREV <2>	<1>	<0>
PROTO 0	0	0	0
PROTO 0	0	0	1
PROTO 1A	0	1	0
PROTO 1B	0	1	1
EVT	1	0	0
PVT	1	0	1

0=NO_STUFF, 1=STUFF

SEP EEPROM

(Write: 0xA2, Read 0xA3)

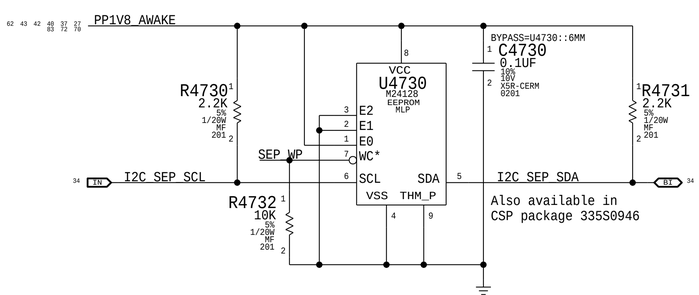

SoC ROM

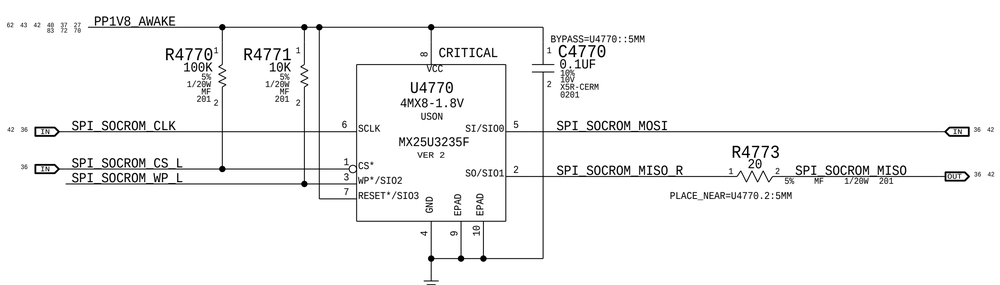

PCH PM Level Shifting

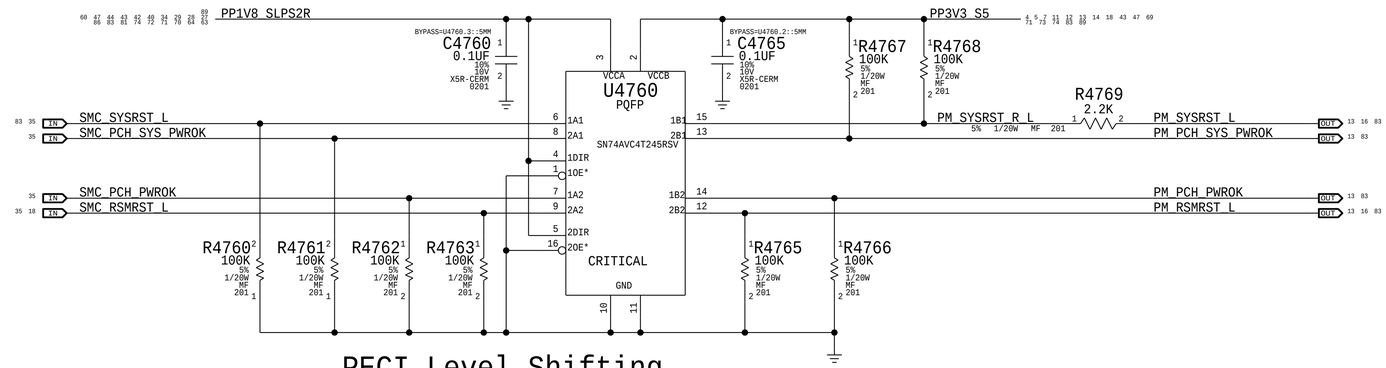

PECI Level Shifting

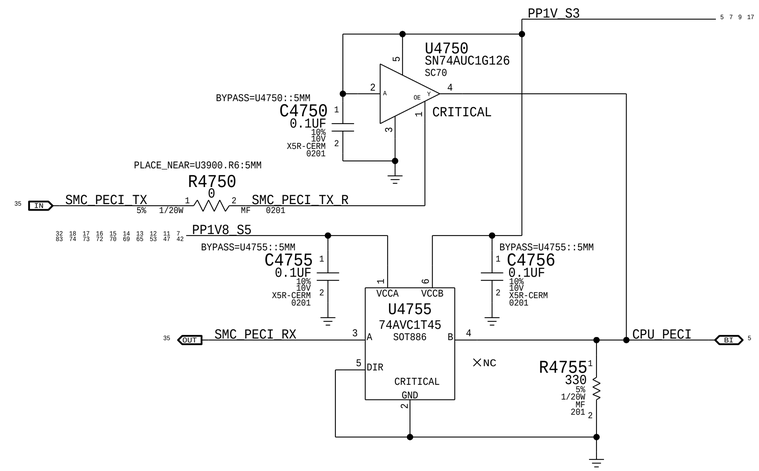

PROCHOT# Level Shifting

rdar://problem/34583713

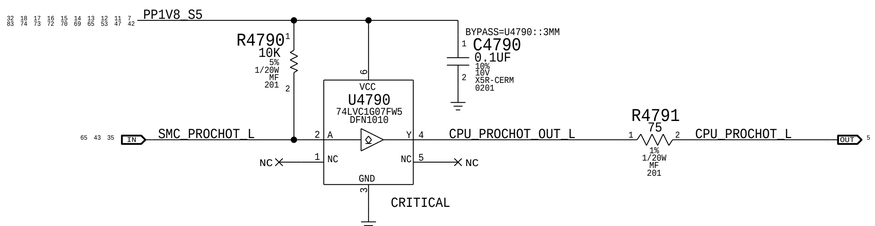

SMC AVREF Supply

Footprint supports 353S01042 alternate

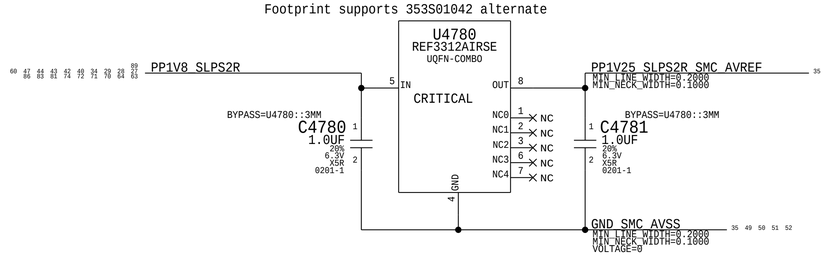

BOM_COST_GROUP=SOC

PAGE TITLE
SOC SHARED SUPPORT

Apple Inc.

DRAWING NUMBER 051-05309 SIZE D
REVISION 5.1.0
BRANCH
PAGE 47 OF 500
SHEET 42 OF 98

NOTICE OF PROPRIETARY PROPERTY:
THE INFORMATION CONTAINED HEREIN IS THE PROPRIETARY PROPERTY OF APPLE INC.
THE POSESSOR AGREES TO THE FOLLOWING:
I TO MAINTAIN THIS DOCUMENT IN CONFIDENCE
II NOT TO REPRODUCE OR COPY IT
III NOT TO REVEAL OR PUBLISH IT IN WHOLE OR PART
IV ALL RIGHTS RESERVED

www.haojiyoubbs.com
QQ微信：181806465

PCIe Up R2D AC Caps

PCIE_SOC_R2D_C_P<0>	C4820	0.22UF	20% 6.3V X5R 0201	PCIE_SOC_R2D_P<0>	
PCIE_SOC_R2D_C_N<0>	C4821	0.22UF	20% 6.3V X5R 0201	PCIE_SOC_R2D_N<0>	
PCIE_SOC_R2D_C_P<1>	C4822	0.22UF	20% 6.3V X5R 0201	PCIE_SOC_R2D_P<1>	
PCIE_SOC_R2D_C_N<1>	C4823	0.22UF	20% 6.3V X5R 0201	PCIE_SOC_R2D_N<1>	
PCIE_SOC_R2D_C_P<2>	C4824	0.22UF	20% 6.3V X5R 0201	PCIE_SOC_R2D_P<2>	
PCIE_SOC_R2D_C_N<2>	C4825	0.22UF	20% 6.3V X5R 0201	PCIE_SOC_R2D_N<2>	
PCIE_SOC_R2D_C_P<3>	C4826	0.22UF	20% 6.3V X5R 0201	PCIE_SOC_R2D_P<3>	
PCIE_SOC_R2D_C_N<3>	C4827	0.22UF	20% 6.3V X5R 0201	PCIE_SOC_R2D_N<3>	

GPIO Source Termination

I2S_SPKRAMP_L_R2D_R	R4843	20	PLACE_NEAR=U3900.AC32:5MM	I2S_SPKRAMP_L_R2D	
I2S_SPKRAMP_L_BCLK_R	R4844	20	PLACE_NEAR=U3900.Y29:5MM	I2S_SPKRAMP_L_BCLK	
I2S_SPKRAMP_L_LRCLK_R	R4863	20	PLACE_NEAR=U3900.AE32:5MM	I2S_SPKRAMP_L_LRCLK	
I2S_SPKRAMP_R_R2D_R	R4845	20	PLACE_NEAR=U3900.E17:5MM	I2S_SPKRAMP_R_R2D	
I2S_SPKRAMP_R_BCLK_R	R4846	20	PLACE_NEAR=U3900.D17:5MM	I2S_SPKRAMP_R_BCLK	
I2S_SPKRAMP_R_LRCLK_R	R4864	20	PLACE_NEAR=U3900.B18:5MM	I2S_SPKRAMP_R_LRCLK	
I2S_CODEC_R2D_R	R4847	20	PLACE_NEAR=U3900.AA33:5MM	I2S_CODEC_R2D	
I2S_CODEC_BCLK_R	R4848	20	PLACE_NEAR=U3900.AE33:5MM	I2S_CODEC_BCLK	
I2S_CODEC_LRCLK_R	R4865	20	PLACE_NEAR=U3900.V29:5MM	I2S_CODEC_LRCLK	
SPI_TPAD_MOSI_R	R4851	20	PLACE_NEAR=U3900.J30:5MM	SPI_TPAD_MOSI	
SPI_TPAD_CLK_R	R4852	20	PLACE_NEAR=U3900.K33:5MM	SPI_TPAD_CLK	
SPI_TPAD_MISO_R	R4867	20	PLACE_NEAR=U6860.4:2MM	SPI_TPAD_MISO	
SPI_MESA_MOSI_R	R4853	20	PLACE_NEAR=U3900.A20:5MM	SPI_MESA_MOSI	
SPI_MESA_CLK_R	R4854	20	PLACE_NEAR=U3900.D16:5MM	SPI_MESA_CLK	
SPI_DFR_MISO_R	R4866	20	PLACE_NEAR=J5100.7:7MM	SPI_DFR_MISO	
SPI_DFR_MOSI_R	R4855	20	PLACE_NEAR=U3900.C17:5MM	SPI_DFR_MOSI	
SPI_DFR_CLK_R	R4856	20	PLACE_NEAR=U3900.C16:5MM	SPI_DFR_CLK	
SSD0_CLK24M_R	R4857	0	PLACE_NEAR=U3900.AM6:7MM	SSD0_CLK24M	
PDM_DMIC_CLK0_R	R4859	20	PLACE_NEAR=U3900.N6:5MM	PDM_DMIC_CLK0	
PDM_DMIC_CLK1_R	R4860	20	PLACE_NEAR=U3900.J6:5MM	PDM_DMIC_CLK1	
SPI_AOP_SENSOR_MOSI_R	R4861	20	PLACE_NEAR=U3900.A5:5MM	SPI_AOP_SENSOR_MOSI	
SPI_AOP_SENSOR_CLK_R	R4862	20	PLACE_NEAR=U3900.E5:5MM	SPI_AOP_SENSOR_CLK	
SPI_AOP_SENSOR_MISO_R	R4869	20	PLACE_NEAR=U4870.3:5MM	SPI_AOP_SENSOR_MISO	

Remote Feedback Sense (Buck 0, 2 & 5)

PPVDDCPU_AWAKE	XW4820	PLACE_NEAR=U3900.AA12:5MM	PVDDCPUAWAKE_FB_R	R4820 0201 5%	NOSTUFF; PLACE_NEAR=R7806.1:1MM; 0 MF 1/20W; PVDDCPUAWAKE_FB
PP0V82_SLPDDR	XW4821	PLACE_NEAR=U3900.M25:5MM	P0V8SLPDDR_FB_R	R4821 0201 5%	PLACE_NEAR=R7812.1:1MM; 0 MF 1/20W; P0V8SLPDDR_FB
PP0V9_SLPDDR	XW4822	PLACE_NEAR=U3900.AE22:5MM	P0V9SLPDDR_FB_R	R4822 0201 5%	PLACE_NEAR=R7816.1:1MM; 0 MF 1/20W; P0V9SLPDDR_FB

Droop Circuit

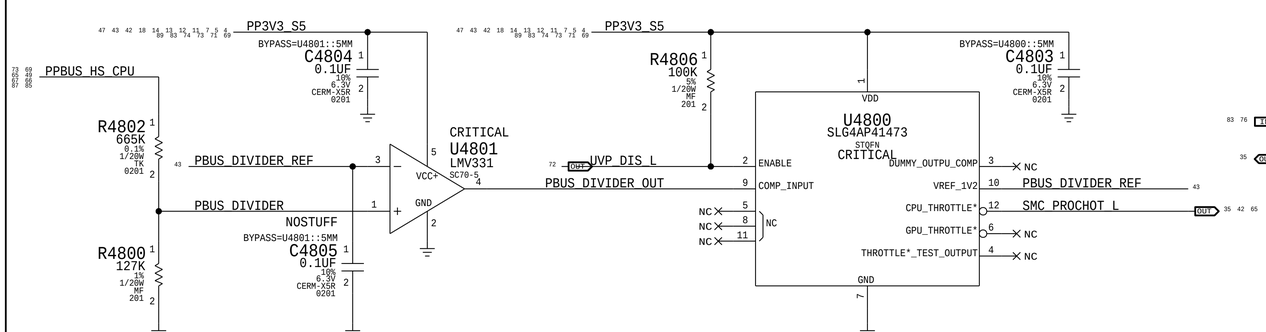

Triaxial acceleration sensor

NOSTUFF U4870 etc. per <rdar://46140415>

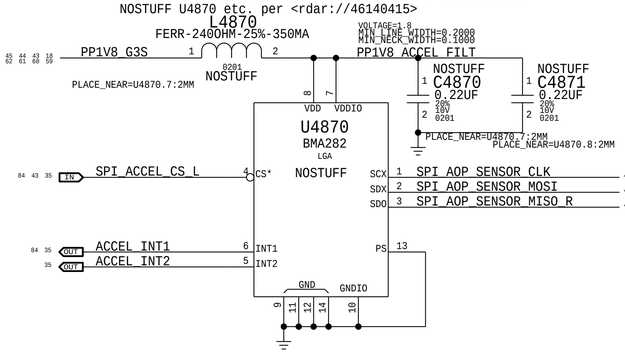

Project Specific Pull-Ups

PP1V8_SLPS2R

R4895	100K	5% 1/20W MF 201	SSD_PMU_RESET_L

PP1V8_AWAKE

R4883	47K	5% 1/20W MF 201	SSD0_CLKREQ0_L
R4884	47K	5% 1/20W MF 201	SSD0_CLKREQ1_L
R4887	47K	5% 1/20W MF 201	SSD0_CLKREQ2_L
R4888	47K	5% 1/20W MF 201	SSD0_CLKREQ3_L

PP1V8_G3S

R4871	100K	5% 1/20W MF 201	SPI_ACCEL_CS_L
R4872	100K	5% 1/20W MF 201	SPI_AOP_SENSOR_CLK
R4873	100K	5% 1/20W MF 201	SPI_AOP_SENSOR_MOSI
R4874	100K	5% 1/20W MF 201	SPI_AOP_SENSOR_MISO
R4875	100K	5% 1/20W MF 201	UART_WLAN_D2R
R4876	100K	5% 1/20W MF 201	UART_WLAN_D2R_CTS_L
R4885	100K	5% 1/20W MF 201	SSD0_PCIE_RESET_L
R4886	47K	5% 1/20W MF 201	SSD0_CLK24M; PLACE_NEAR=R4857.1:1MM
R4870	47K	5% 1/20W MF 201	I2S_SPKRAMP_R_D2R

SoC Test Points

TP_SOC_AMUXOUT	PP4801 SM-SP
TP_SOC_TST_CLKOUT	PP4802 SM-SP

Lid Detect Sensors

Clamshell Closed/Open = Low/High
SMC and U6650 isolated per <rdar://45820207>

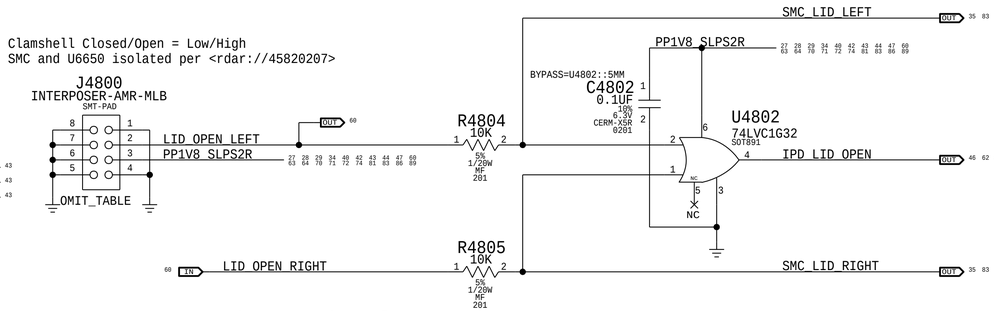

Unused SOC Signals

NC_PLCAM_TX_THROTTLE	NO_TEST=1
NC_GNSS_HOST_TIME	NO_TEST=1
NC_GNSS_DEV_WAKE	NO_TEST=1
NC_SOC_WLAN_DEV_WAKE	NO_TEST=1
NC_SOC_USB_ID	NO_TEST=1
NC_ALTIMETER_INT	NO_TEST=1
NC_SPI_ALTIMETER_CS_L	NO_TEST=1
NC_I2C_AOP_SCL	NO_TEST=1
NC_I2C_AOP_SDA	NO_TEST=1
NC_UART_BT_D2R	NO_TEST=1
NC_UART_BT_R2D	NO_TEST=1
NC_UART_BT_D2R_CTS_L	NO_TEST=1
NC_UART_BT_R2D_RTS_L	NO_TEST=1
NC_UART_GNSS_D2R_CTS_L	NO_TEST=1
NC_UART_GNSS_R2D_RTS_L	NO_TEST=1
NC_PLCAM_PROX_INT_L	NO_TEST=1
NC_PLCAM_ROMEO_B2B_DETECT	NO_TEST=1
NC_SMC_GFX_SELF_THROTTLE	NO_TEST=1
NC_SMC_TOPBLK_SWP_L	NO_TEST=1
NC_PCIEDN_WAKE_L	NO_TEST=1
NC_ENET_LOW_PWR	NO_TEST=1
NC_SDCONN_STATE_CHANGE_L	NO_TEST=1
NC_ENET_MEDIA_SENSE	NO_TEST=1
NC_SOC_WLAN_JTAG_TMS	NO_TEST=1
NC_MESA_MENUKEY_L	NO_TEST=1
NC_SOC_WLAN_JTAG_TCK	NO_TEST=1
NC_PCC_EVENT	NO_TEST=1
NC_TPAD_VIBE_L	NO_TEST=1
NC_SPI_DESCRIPTOR_OVERRIDE_L	NO_TEST=1
NC_DISP_GCON_INT_L	NO_TEST=1
NC_PCH_GCON_INT_L	NO_TEST=1
NC_SMC_FAN_1_PWM	NO_TEST=1
NC_SMC_FAN_1_TACH	NO_TEST=1
NC_SMC_LED_ONEWIRE	NO_TEST=1
NC_SSD1_SWCLK_UART_R2D	NO_TEST=1
NC_SSD1_SWDIO_UART_D2R	NO_TEST=1
NC_I2C_SOC_5_SDA	NO_TEST=1
NC_I2C_SOC_5_SCL	NO_TEST=1
NC_DFR_TOUCH_RSVD	NO_TEST=1
NC_PCHROM_SW_EN	NO_TEST=1
NC_I2S_CODEC_MCLK	NO_TEST=1
NC_I2S_HAWKING_D2R	NO_TEST=1
NC_I2S_CODEC1_R2D_R	NO_TEST=1
NC_I2S_HAWKING_BCLK_R	NO_TEST=1
NC_I2S_HAWKING_LRCLK	NO_TEST=1
NC_I2S_CODEC1_MCLK	NO_TEST=1
NC_I2C_PLCAM_SDA	NO_TEST=1
NC_I2C_PLCAM_SCL	NO_TEST=1
NC_FTCAM_CLK12M_R	NO_TEST=1
NC_FTCAM_RESET_L	NO_TEST=1
NC_PLCAM_RX_CLK12M_R	NO_TEST=1
NC_PLCAM_RX_RESET_L	NO_TEST=1
NC_PLCAM_TX_CLK12M_R	NO_TEST=1
NC_PLCAM_TX_RESET_L	NO_TEST=1
NC_PLCAM_TX_INT	NO_TEST=1
NC_PCIE_WLAN_R2D_C_P	NO_TEST=1
NC_PCIE_WLAN_R2D_C_N	NO_TEST=1
NC_PCIE_WLAN_D2R_P	NO_TEST=1
NC_PCIE_WLAN_D2R_N	NO_TEST=1
NC_PCIE_ENET_R2D_C_P	NO_TEST=1
NC_PCIE_ENET_R2D_C_N	NO_TEST=1
NC_PCIE_ENET_D2R_P	NO_TEST=1
NC_PCIE_ENET_D2R_N	NO_TEST=1
NC_PCIE_DN2_R2D_C_P	NO_TEST=1
NC_PCIE_DN2_R2D_C_N	NO_TEST=1
NC_PCIE_DN2_D2R_P	NO_TEST=1
NC_PCIE_DN2_D2R_N	NO_TEST=1
NC_PCIE_DN3_R2D_C_P	NO_TEST=1
NC_PCIE_DN3_R2D_C_N	NO_TEST=1
NC_PCIE_DN3_D2R_P	NO_TEST=1
NC_PCIE_DN3_D2R_N	NO_TEST=1
NC_PCIE_CLK100M_WLAN_P	NO_TEST=1
NC_PCIE_CLK100M_WLAN_N	NO_TEST=1
NC_WLAN_CLKREQ_L	NO_TEST=1
NC_WLAN_PERST_L	NO_TEST=1
NC_PCIE_CLK100M_ENET_P	NO_TEST=1
NC_PCIE_CLK100M_ENET_N	NO_TEST=1
NC_ENET_RESET_L	NO_TEST=1
NC_PCIE_CLK100M_DN2_P	NO_TEST=1
NC_PCIE_CLK100M_DN2_N	NO_TEST=1
NC_PCIEDN2_CLKREQ_L	NO_TEST=1
NC_PCIEDN2_RESET_L	NO_TEST=1
NC_PCIE_CLK100M_DN3_P	NO_TEST=1
NC_PCIE_CLK100M_DN3_N	NO_TEST=1
NC_PCIEDN3_CLKREQ_L	NO_TEST=1
NC_PCIEDN3_RESET_L	NO_TEST=1
NC_PCIE_SSD1_R2D_C_P<0>	NO_TEST=1
NC_PCIE_SSD1_R2D_C_N<0>	NO_TEST=1
NC_PCIE_SSD1_D2R_P<0>	NO_TEST=1
NC_PCIE_SSD1_D2R_N<0>	NO_TEST=1
NC_PCIE_SSD1_R2D_C_P<1>	NO_TEST=1
NC_PCIE_SSD1_R2D_C_N<1>	NO_TEST=1
NC_PCIE_SSD1_D2R_P<1>	NO_TEST=1
NC_PCIE_SSD1_D2R_N<1>	NO_TEST=1
NC_PCIE_SSD1_R2D_C_P<2>	NO_TEST=1
NC_PCIE_SSD1_R2D_C_N<2>	NO_TEST=1
NC_PCIE_SSD1_D2R_P<2>	NO_TEST=1
NC_PCIE_SSD1_D2R_N<2>	NO_TEST=1
NC_PCIE_SSD1_R2D_C_P<3>	NO_TEST=1
NC_PCIE_SSD1_R2D_C_N<3>	NO_TEST=1
NC_PCIE_SSD1_D2R_P<3>	NO_TEST=1
NC_PCIE_SSD1_D2R_N<3>	NO_TEST=1
NC_PCIE_CLK100M_SSD1_01_P	NO_TEST=1
NC_PCIE_CLK100M_SSD1_01_N	NO_TEST=1
NC_SSD1_CLKREQ0_L	NO_TEST=1
NC_SSD1_CLKREQ1_L	NO_TEST=1
NC_PCIE_CLK100M_SSD1_23_P	NO_TEST=1
NC_PCIE_CLK100M_SSD1_23_N	NO_TEST=1
NC_SSD1_CLKREQ2_L	NO_TEST=1
NC_SSD1_CLKREQ3_L	NO_TEST=1
NC_SSD1_PCIE_RESET_L	NO_TEST=1
NC_SSD1_CLK24M_R	NO_TEST=1
NC_WLAN_CONTEXT_A	NO_TEST=1
NC_WLAN_CONTEXT_B	NO_TEST=1

HPD KSF Comp Circuit

R4830 needs to be characterized and adjusted if necessary

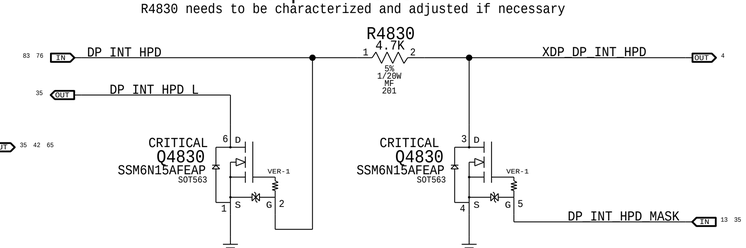

BOM_COST_GROUP=SOC

PAGE TITLE	SOC PROJECT SUPPORT
	Apple Inc.
DRAWING NUMBER	051-05309
SIZE	D
REVISION	5.1.0
BRANCH	
PAGE	48 OF 500
SHEET	43 OF 98

NOTICE OF PROPRIETARY PROPERTY:
THE INFORMATION CONTAINED HEREIN IS THE PROPRIETARY PROPERTY OF APPLE INC.
THE POSESSOR AGREES TO THE FOLLOWING:
I TO MAINTAIN THIS DOCUMENT IN CONFIDENCE
II NOT TO REPRODUCE OR COPY IT
III NOT TO REVEAL OR PUBLISH IT IN WHOLE OR PART
IV ALL RIGHTS RESERVED

www.haojiyoubbs.com
QQ微信：181806465

T151 FLEX CONNECTOR

ISOLATE FROM OTHER COMPONENTS/NETS AS MUCH AS POSSIBLE

ESD Filters

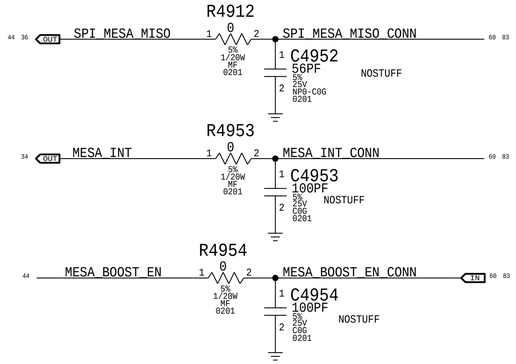

ISOLATE FROM OTHER COMPONENTS/NETS AS MUCH AS POSSIBLE

ESD Filters

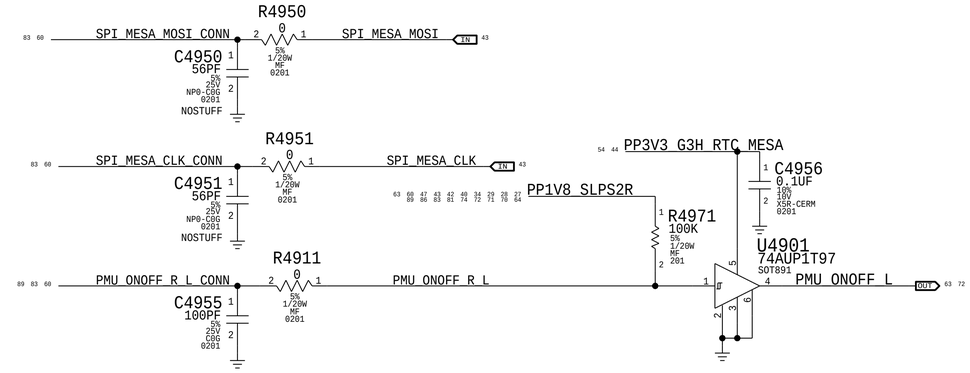

Mesa Power Sequencing Requirements

Power On: 1V8 -> 3V3 -> 16V0

MOJAVE 16V BOOST

Output Voltage	16.0V +/- 2%
Iout (max avg)	6mA
OCP (min)	13 mA
Active Discharge	15 mA sink
Max Output Cap	0.5uF @ 16V

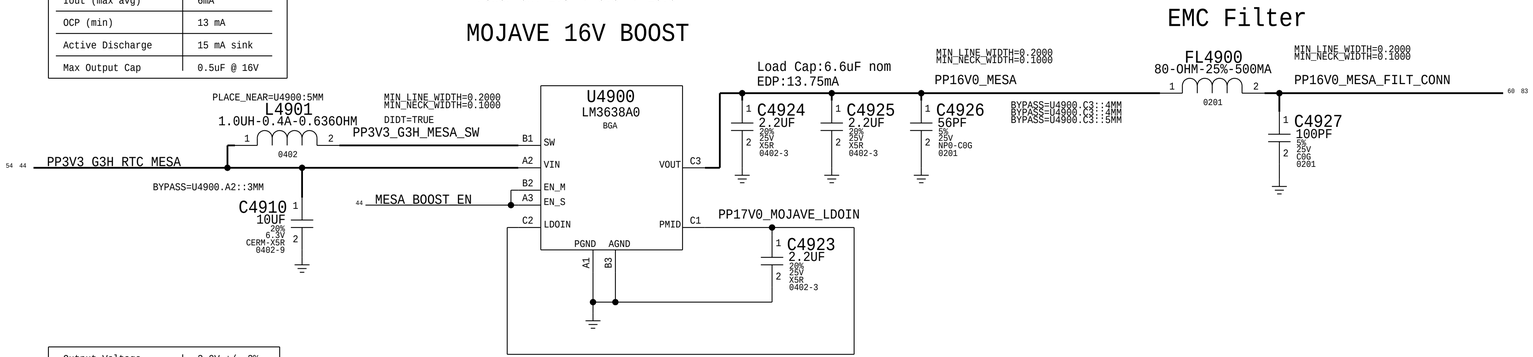

EMC Filter

Output Voltage	3.0V +/- 2%
Iout (max avg)	250mA
Dropout Voltage	155mV
OCP (min)	250 mA
Active Discharge	280 Ohm Typ

3.0V MESA

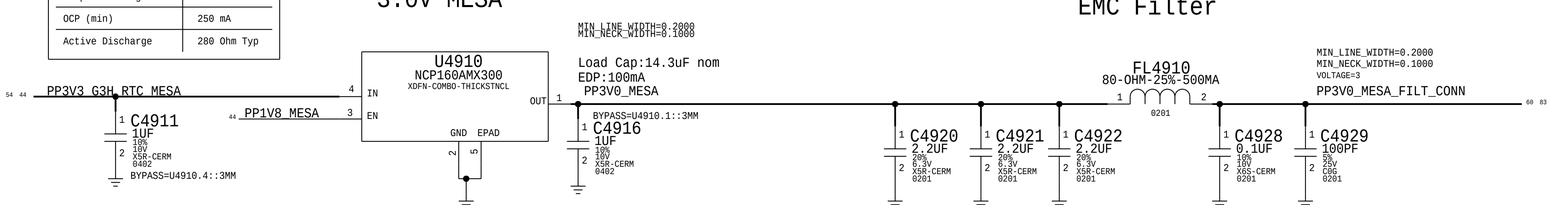

EMC Filter

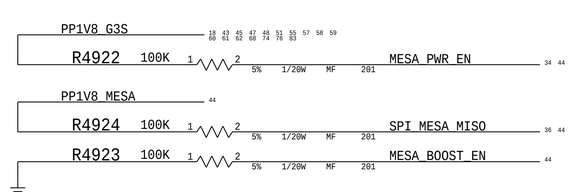

Output Voltage	1.85V +/- 2%
Iout (max avg)	250mA
Dropout Voltage	50mV Typ @ 100mA
OCP (min)	250 mA
Active Discharge	230 Ohm Typ
Max Output Cap	10uF

1.85V MESA

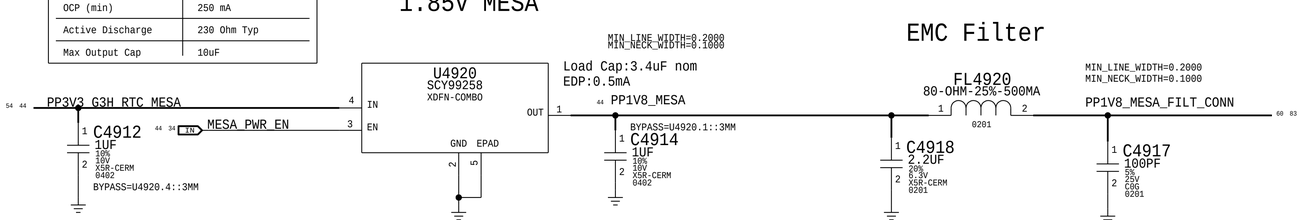

EMC Filter

BOM_COST_GROUP=MESA

PAGE TITLE	T151
	Apple Inc.
DRAWING NUMBER	051-05309
SIZE	D
REVISION	5.1.0
BRANCH	
PAGE	49 OF 500
SHEET	44 OF 98

NOTICE OF PROPRIETARY PROPERTY:
THE INFORMATION CONTAINED HEREIN IS THE PROPRIETARY PROPERTY OF APPLE INC.
THE POSESSOR AGREES TO THE FOLLOWING:
I TO MAINTAIN THIS DOCUMENT IN CONFIDENCE
II NOT TO REPRODUCE OR COPY IT
III NOT TO REVEAL OR PUBLISH IT IN WHOLE OR PART
IV ALL RIGHTS RESERVED

www.haojiyoubbs.com
QQ微信：181806465

VENUS

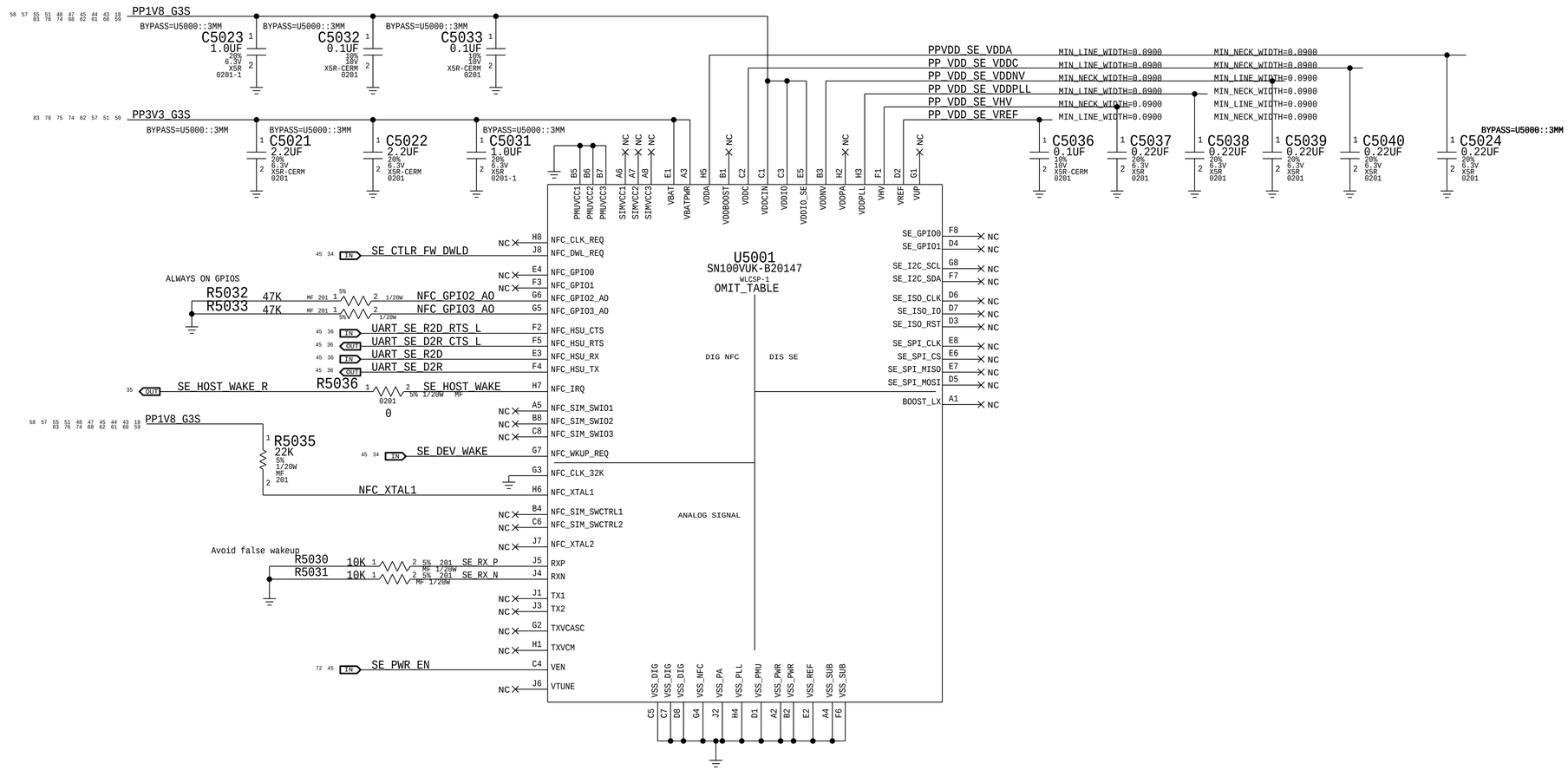

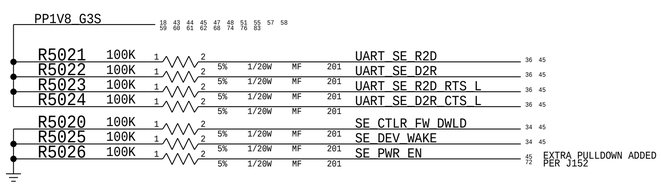

BOM_COST_GROUP=SOC

PAGE TITLE	SECURE ELEMENT
Apple Inc.	DRAWING NUMBER 051-05309 SIZE D
	REVISION 5.1.0
NOTICE OF PROPRIETARY PROPERTY: THE INFORMATION CONTAINED HEREIN IS THE PROPRIETARY PROPERTY OF APPLE INC. THE POSESSOR AGREES TO THE FOLLOWING: I TO MAINTAIN THIS DOCUMENT IN CONFIDENCE II NOT TO REPRODUCE OR COPY IT III NOT TO REVEAL OR PUBLISH IT IN WHOLE OR PART IV ALL RIGHTS RESERVED	BRANCH
	PAGE 50 OF 500
	SHEET 45 OF 98

www.haojiyoubbs.com
QQ微信：181806465

T139 Support

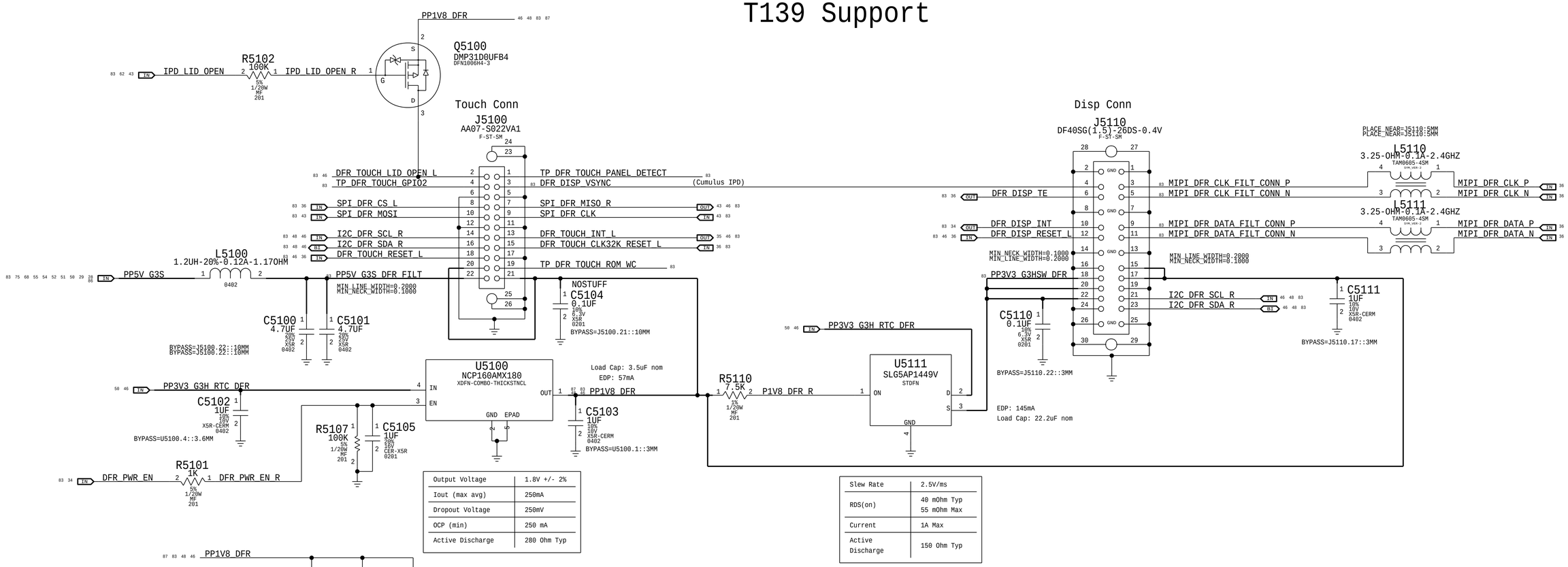

Output Voltage	1.8V +/- 2%
Iout (max avg)	250mA
Dropout Voltage	250mV
OCP (min)	250 mA
Active Discharge	280 Ohm Typ

Slew Rate	2.5V/ms
RDS(on)	40 mOhm Typ 55 mOhm Max
Current	1A Max
Active Discharge	150 Ohm Typ

BOM_COST_GROUP=DFR

PAGE TITLE
T139 SUPPORT

Apple Inc.

DRAWING NUMBER 051-05309
SIZE D
REVISION 5.1.0
BRANCH
PAGE 51 OF 500
SHEET 46 OF 98

NOTICE OF PROPRIETARY PROPERTY:
THE INFORMATION CONTAINED HEREIN IS THE PROPRIETARY PROPERTY OF APPLE INC.
THE POSESSOR AGREES TO THE FOLLOWING:
I TO MAINTAIN THIS DOCUMENT IN CONFIDENCE
II NOT TO REPRODUCE OR COPY IT
III NOT TO REVEAL OR PUBLISH IT IN WHOLE OR PART
IV ALL RIGHTS RESERVED

www.haojiyoubbs.com
QQ微信：181806465

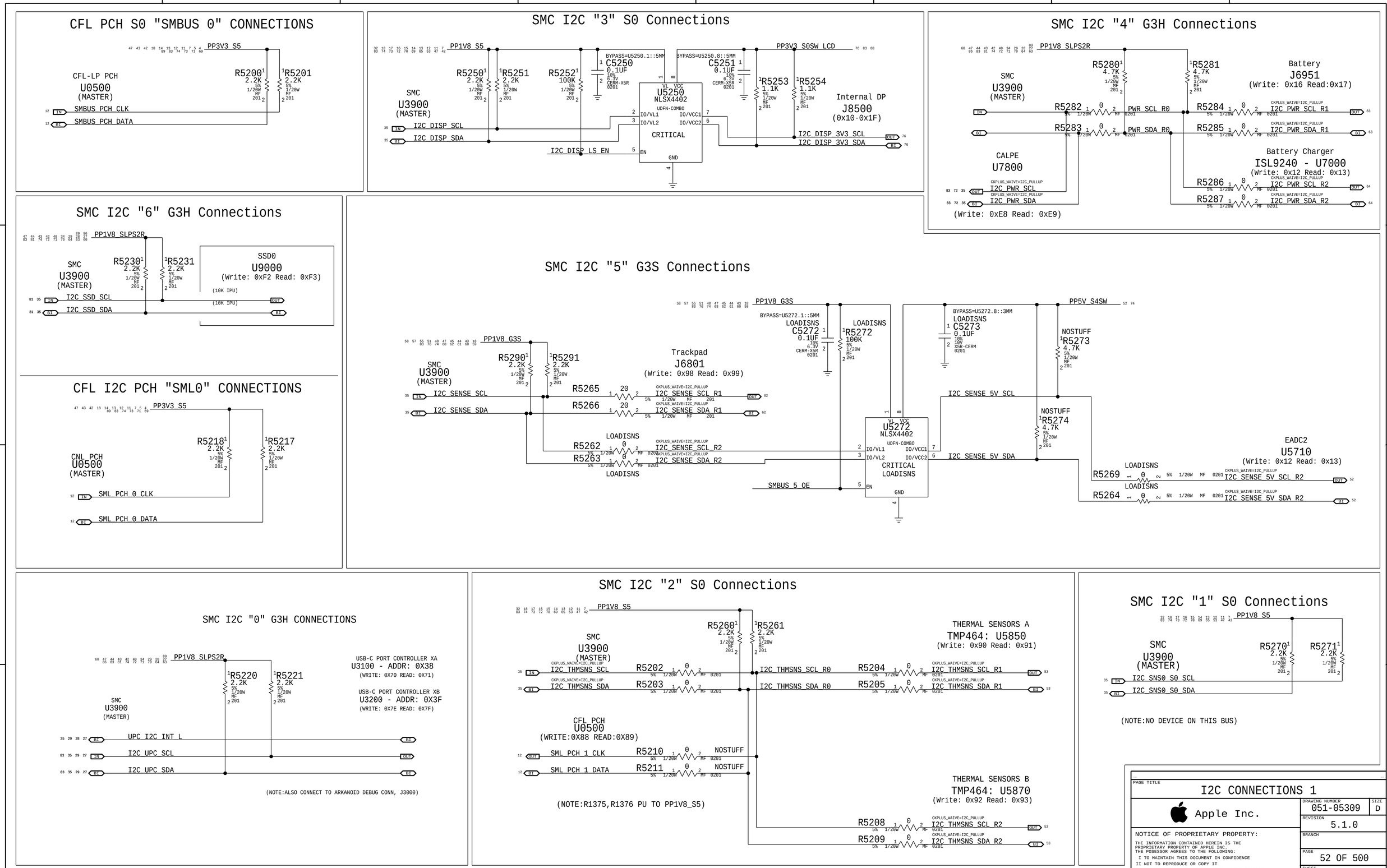

www.haojiyoubbs.com
QQ微信：181806465

AP I2C "0" G3S Connections

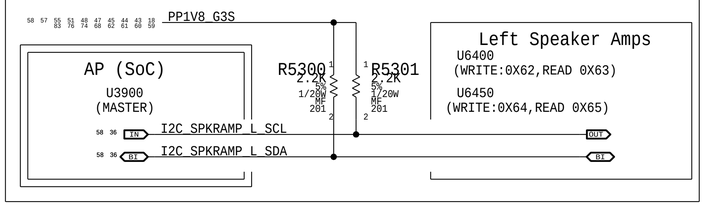

AP I2C "1" G3S Connections

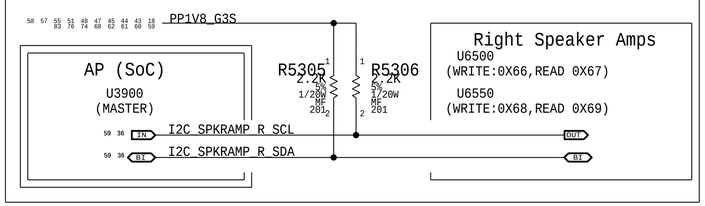

AP I2C "2" Codec Connections

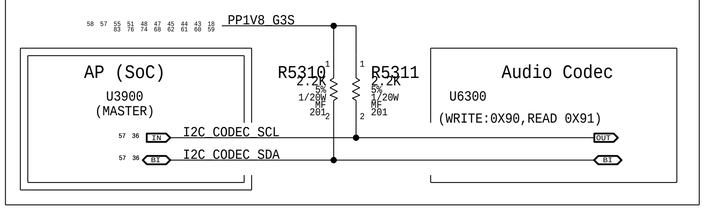

AP I2C "3" G3S Connections

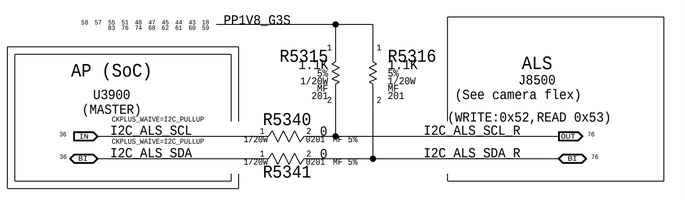

AP I2C "4" DFR Connections

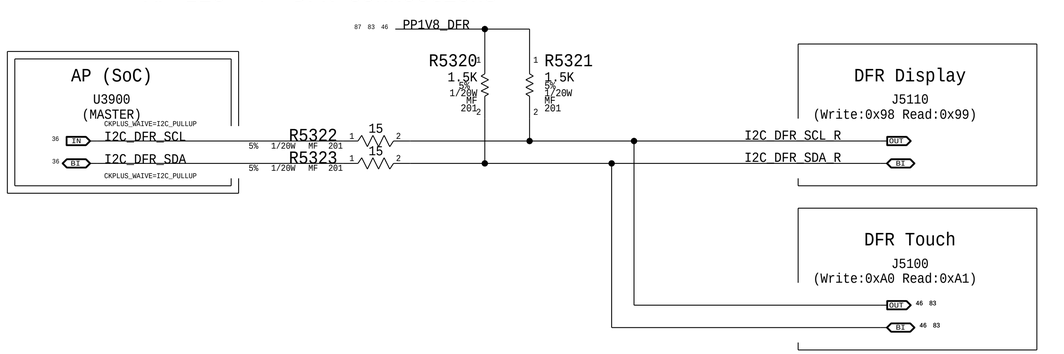

ISP I2C "0" G3S Connections

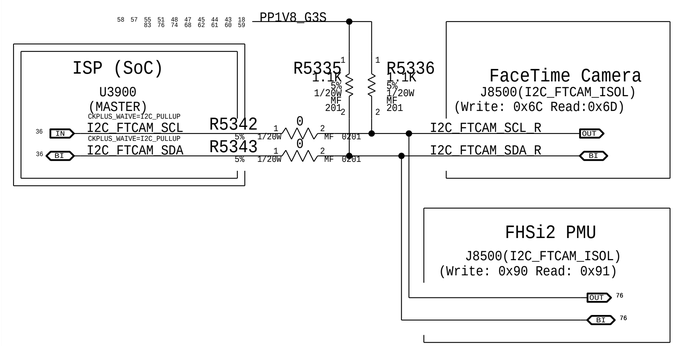

Device	SMC IF	ADDR. (8b)
ACE XA	I2C0	0X70/1
ACE XB	I2C0	0X7E/F
NC.	I2C1	
TEMP. SENSOR A	I2C2	0X90/1
TEMP. SENSOR B	I2C2	0X92/3
TCON	I2C3	0X10-1F
Charger	I2C4	0X12/3
Battery	I2C4	0X16/7
Calpe	I2C4	0XE8/9
Trackpad	I2C5	0X98/9
EADC1	I2C5	0X10/1
EADC2	I2C5	0X12/3
SSD	I2C6	0XF2/3
SOC IF (AP)		
Left Spkr Amp.(U6400)	I2C0	0X62/3
Left Spkr Amp.(U6450)	I2C0	0X64/5
Right Spkr Amp.(U6500)	I2C1	0X66/7
Right Spkr Amp.(U6550)	I2C1	0X68/9
Audio Codec	I2C2	0X90/1
ALS	I2C3	0X52/3
DFR Display	I2C4	0X98/9
DFR Touch	I2C4	0XA0/1
NC.	I2C5	
Spkr ID1	I2C6	
Spkr ID0	I2C6	
SIP IF (ISP)		
FT Camera	I2C0	0X6C/D
FHSi2	I2C0	0X90/1
NC.	I2C1	
AOP IF		
NC.	I2C0	

BOM_COST_GROUP=SMC

PAGE TITLE
I2C CONNECTIONS 2

Apple Inc.

DRAWING NUMBER 051-05309 SIZE D
REVISION 5.1.0
BRANCH
PAGE 53 OF 500
SHEET 48 OF 98

NOTICE OF PROPRIETARY PROPERTY:
THE INFORMATION CONTAINED HEREIN IS THE PROPRIETARY PROPERTY OF APPLE INC.
THE POSESSOR AGREES TO THE FOLLOWING:
I TO MAINTAIN THIS DOCUMENT IN CONFIDENCE
II NOT TO REPRODUCE OR COPY IT
III NOT TO REVEAL OR PUBLISH IT IN WHOLE OR PART
IV ALL RIGHTS RESERVED

www.haojiyoubbs.com
QQ微信：181806465

CPU High Side Current Sense (IC0R)

Gain: 100x, EDP: 8.868 A
Rsense: 0.002 (R5400) [Production]
Vsense: 17.7 mV, Range: 12.5 A
SMC ADC: 00

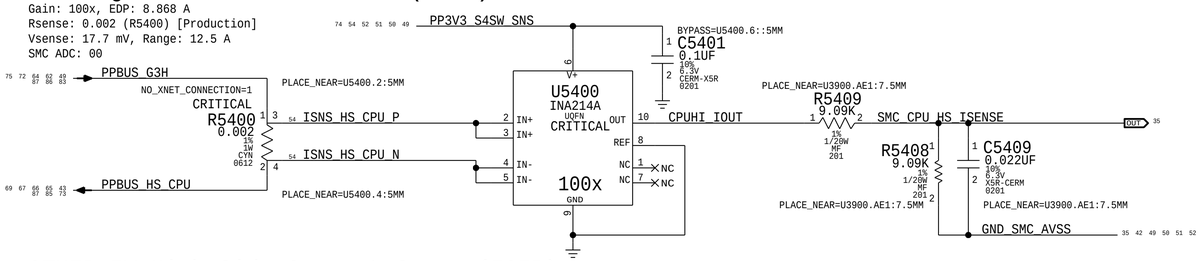

OTHER 5V High Side Current Sense (IO5R)

Gain: 100x, EDP: 5.227 A
Rsense: 0.005 (R5410) or SHORT
Vsense: 26.1 mV, Range: 6.0 A
MUX: A1

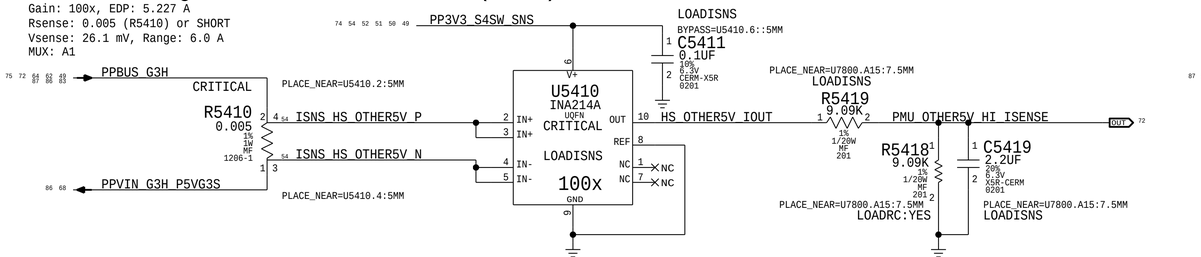

OTHER 3.3V High Side Current Sense (IO3R)

Gain: 100x, EDP: 6.736 A
Rsense: 0.003 (R5440) or SHORT
Vsense: 20.2 mV, Range: 10 A
MUX: A0

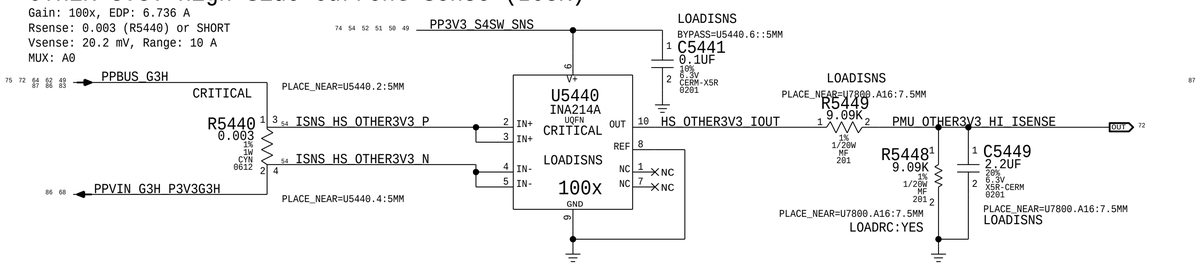

3.3V RTC High Side Current Sense (IR3R)

Gain: 100x, EDP: 2.413 A
Rsense: 0.01 (R5420) or SHORT
Vsense: 24.1 mV, Range: 3.3 A
EADC1: CH4

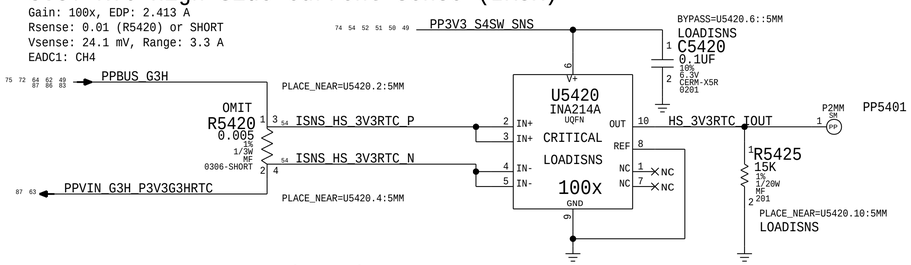

NAND Current Sense (IHNR)

Gain: 100x, EDP: 1.471 A
Rsense: 0.02 (R5460) [Production]
Vsense: 29.4 mV, Range: 1.5 A
MUX: A6

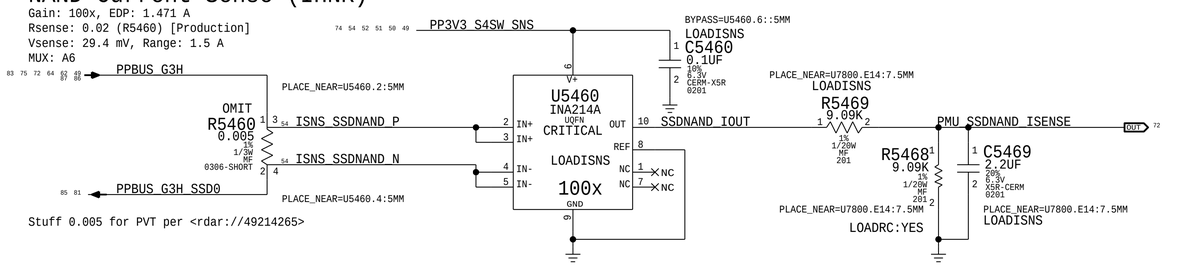

Stuff 0.005 for PVT per <rdar://49214265>

PART NUMBER	QTY	DESCRIPTION	REFERENCE DES	CRITICAL	BOM OPTION
117S0008	3	RES,MTL FLIM,100K,1/16W,0201,SMD,LF	R5418,R5448, R5468		LOADRC:NO

LCD Backlight Current Sense (IBLR)

Gain: 100x. EDP: 0.902 A
Rsense: 0.025 (R8400)
Vsense: 22.6 mV, Range: 1.32 A

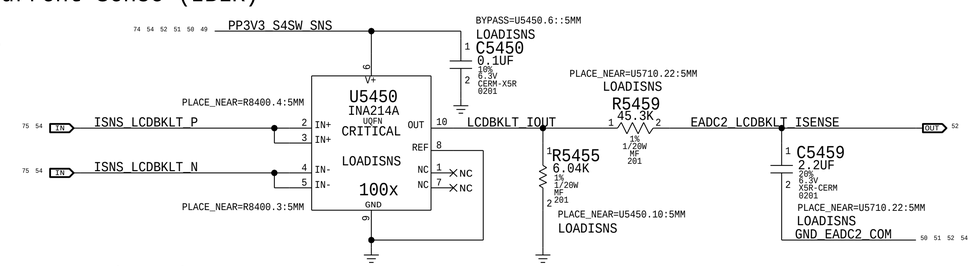

Left AMP Current Sense (IALR)

Gain: 200x, EDP: 2.6 A
Rsense: 0.005 (R54A0) or SHORT
Vsense: 13 mV, Range: 3.3 A

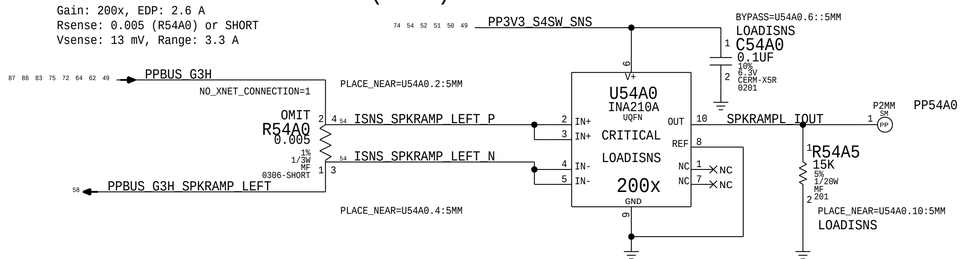

Right AMP Current Sense (IARR)

Gain: 200x, EDP: 2.6 A
Rsense: 0.005 (R54B0) or SHORT
Vsense: 13 mV, Range: 3.3 A

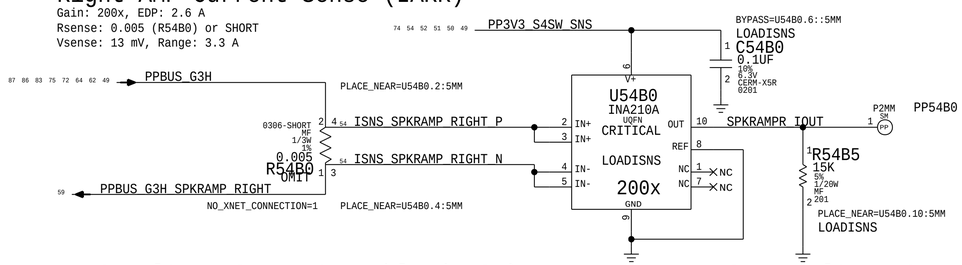

PBUS Voltage Sense & Enable (VP0R)

GAIN: 0.089X
VNOMINAL: 12.6 V, RANGE: 14.05 V
SMC ADC: 01

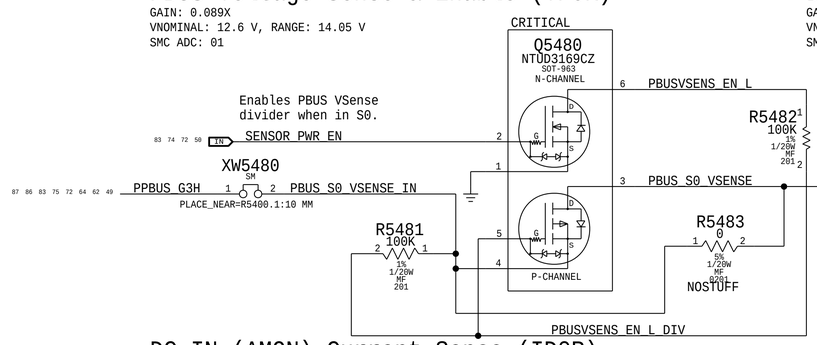

DC In Voltage Sense (VD0R)

GAIN: 0.058X
VNOMINAL: 16.5 V, RANGE: 21.45 V
SMC ADC: 04

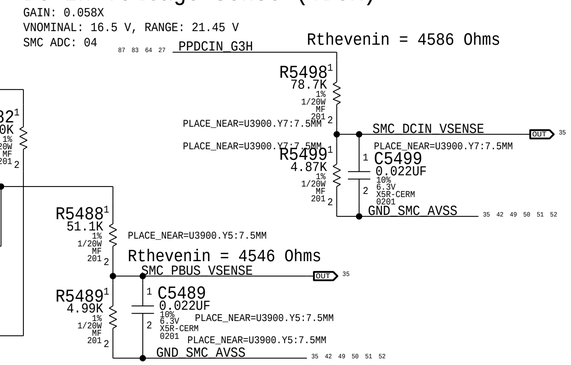

DC-IN (AMON) Current Sense (ID0R)

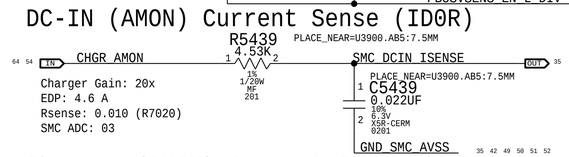

Charger Gain: 20x
EDP: 4.6 A
Rsense: 0.010 (R7020)
SMC ADC: 03

Charger (BMON) Current Sense (IPBR)

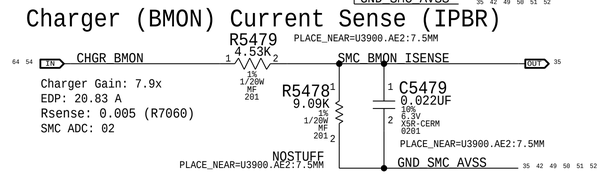

Charger Gain: 7.9x
EDP: 20.83 A
Rsense: 0.005 (R7060)
SMC ADC: 02

BOM_COST_GROUP=SENSORS

PAGE TITLE
POWER SENSORS HIGH SIDE

Apple Inc.

DRAWING NUMBER 051-05309
SIZE D
REVISION 5.1.0
BRANCH
PAGE 54 OF 500
SHEET 49 OF 98

NOTICE OF PROPRIETARY PROPERTY:
THE INFORMATION CONTAINED HEREIN IS THE PROPRIETARY PROPERTY OF APPLE INC.
THE POSESSOR AGREES TO THE FOLLOWING:
I TO MAINTAIN THIS DOCUMENT IN CONFIDENCE
II NOT TO REPRODUCE OR COPY IT
III NOT TO REVEAL OR PUBLISH IT IN WHOLE OR PART
IV ALL RIGHTS RESERVED

www.haojiyoubbs.com
QQ微信：181806465

CPU VCCIO Current Sense (IC1C)

Gain: 200x, EDP: 3.6 A
Rsense: 0.003 (R8102) or SHORT
Vsense: 10.8 mV, Range: 5 A
PMU AMUX: A3

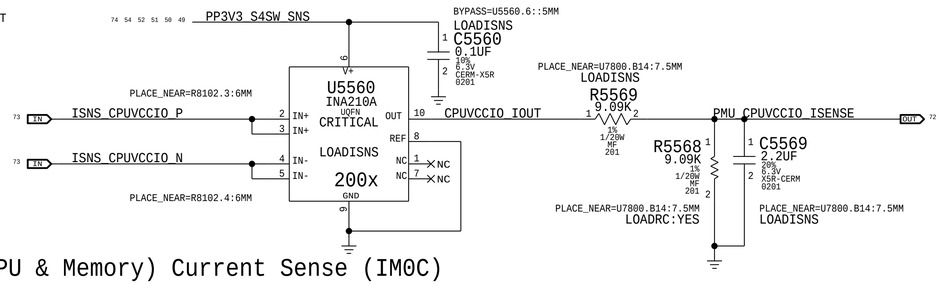

DDR 1.2V S3 (CPU & Memory) Current Sense (IM0C)

Gain: 200x, EDP: 6.9 A
Rsense: 0.002 (R8118) or SHORT
Vsense: 13.8 mV, Range: 7.5 A
PMU AMUX: A4

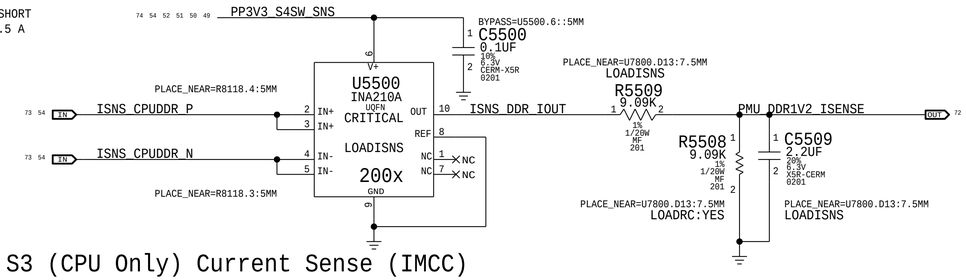

CPU DDR 1.2V S3 (CPU Only) Current Sense (IMCC)

Gain: 200x, EDP: 2.6 A
Rsense: 0.005 (R5510) or SHORT
Vsense: 13 mV, Range: 3 A
PMU AMUX: B2

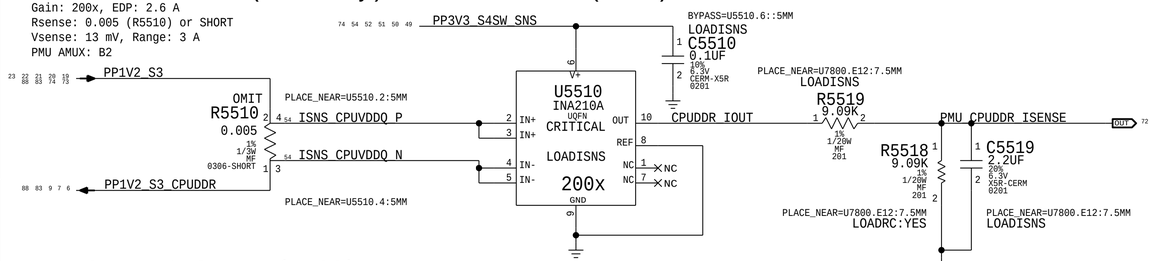

DFR Current Sense (IF3C)

Gain: 100x, EDP: 0.75 A
Rsense: 0.025 (R5520) or SHORT
Vsense: 18.8 mV, Range: 1.32 A

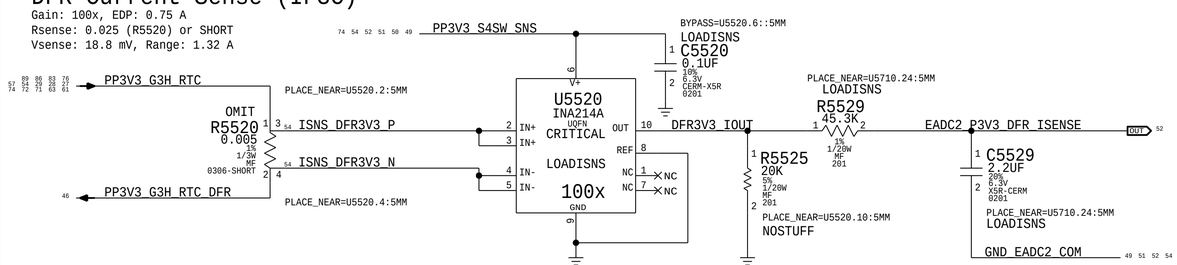

WLANBT 3.3V Current Sense (IW3C)

Gain: 163.3x, EDP: 1.698 A
Rsense: 0.003 (R5530) or Rsense SHORT
VSENSE: 5.09 MV, RANGE: 2.55 A
SMC ADC: 05

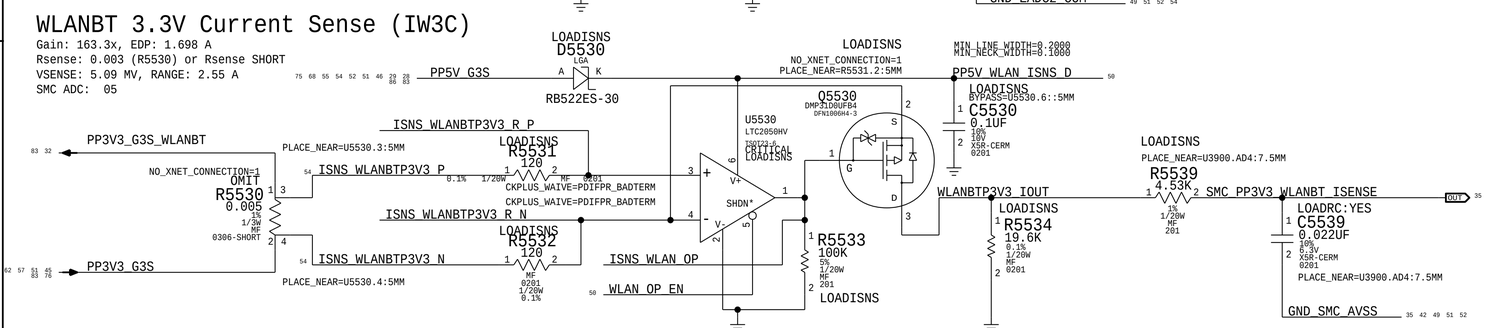

CPU Core Current Sense (ICAC)

Gain: 104.38x, EDP: 64 A
Rsense: 2x of 0.00075 (R7310, R7320), Rsum: 0.000375
Vsense: 24 MV, Range: 76.64 A
PMU AMUX: B7

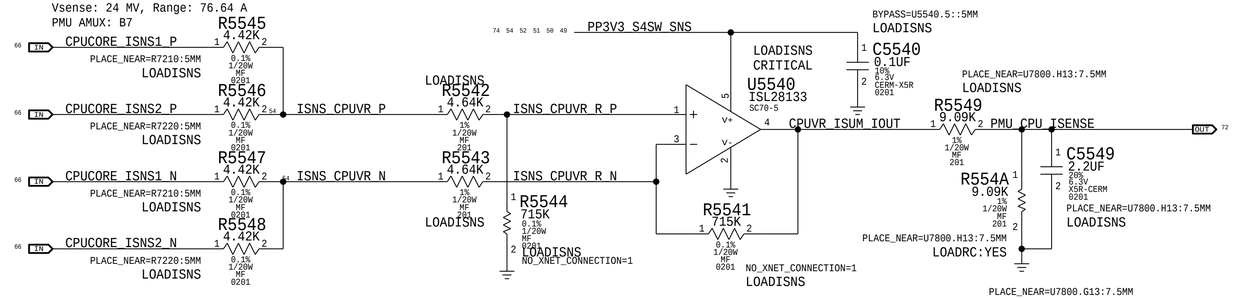

CPU Core Voltage Sense (VCAC)

PMU AMUX: B4

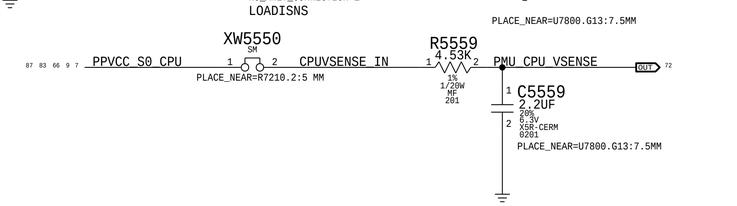

CPU GT+GTX Current Sense (ICGC)

Gain: 104.38x, EDP: 64 A
Rsense: 2x of 0.00075 (R7410, R7420), Rsum: 0.000375
Vsense: 24 mV, Range: 76.64 A
PMU AMUX: B6

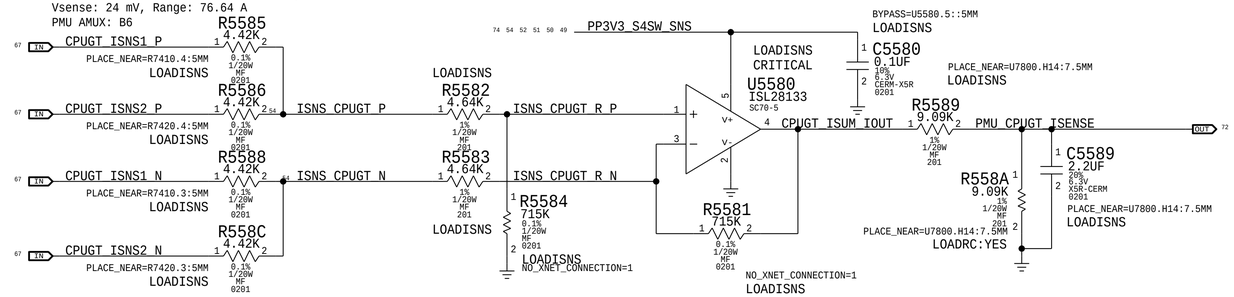

CPU GT Voltage Sense (VCGC)

PMU AMUX: B5

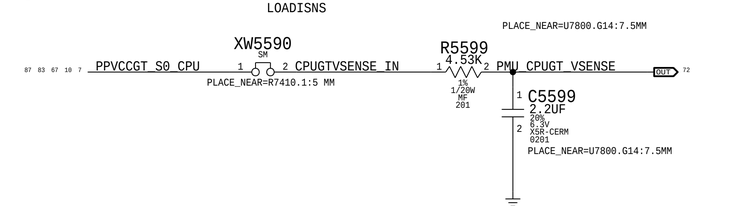

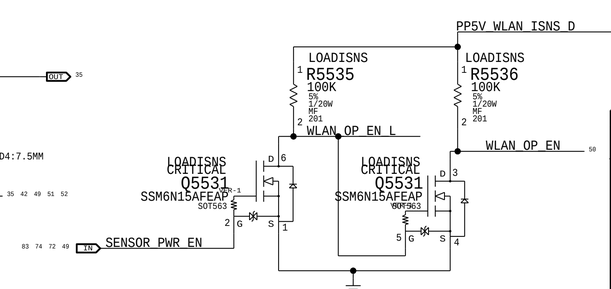

PART NUMBER	QTY	DESCRIPTION	REFERENCE DES	CRITICAL	BOM OPTION
117S0008	6	RES,MTL FLIM,100K,1/16W,0201,SMD,LF	R5508,R5518,R5568,R554A,R558A,C5539		LOADRC:NO

PAGE TITLE: POWER SENSORS LOAD SIDE

Apple Inc.

DRAWING NUMBER: 051-05309
SIZE: D
REVISION: 5.1.0
BRANCH:
PAGE: 55 OF 500
SHEET: 50 OF 98

NOTICE OF PROPRIETARY PROPERTY:
THE INFORMATION CONTAINED HEREIN IS THE PROPRIETARY PROPERTY OF APPLE INC.
THE POSESSOR AGREES TO THE FOLLOWING:
I TO MAINTAIN THIS DOCUMENT IN CONFIDENCE
II NOT TO REPRODUCE OR COPY IT
III NOT TO REVEAL OR PUBLISH IT IN WHOLE OR PART
IV ALL RIGHTS RESERVED

www.haojiyoubbs.com
QQ微信：181806465

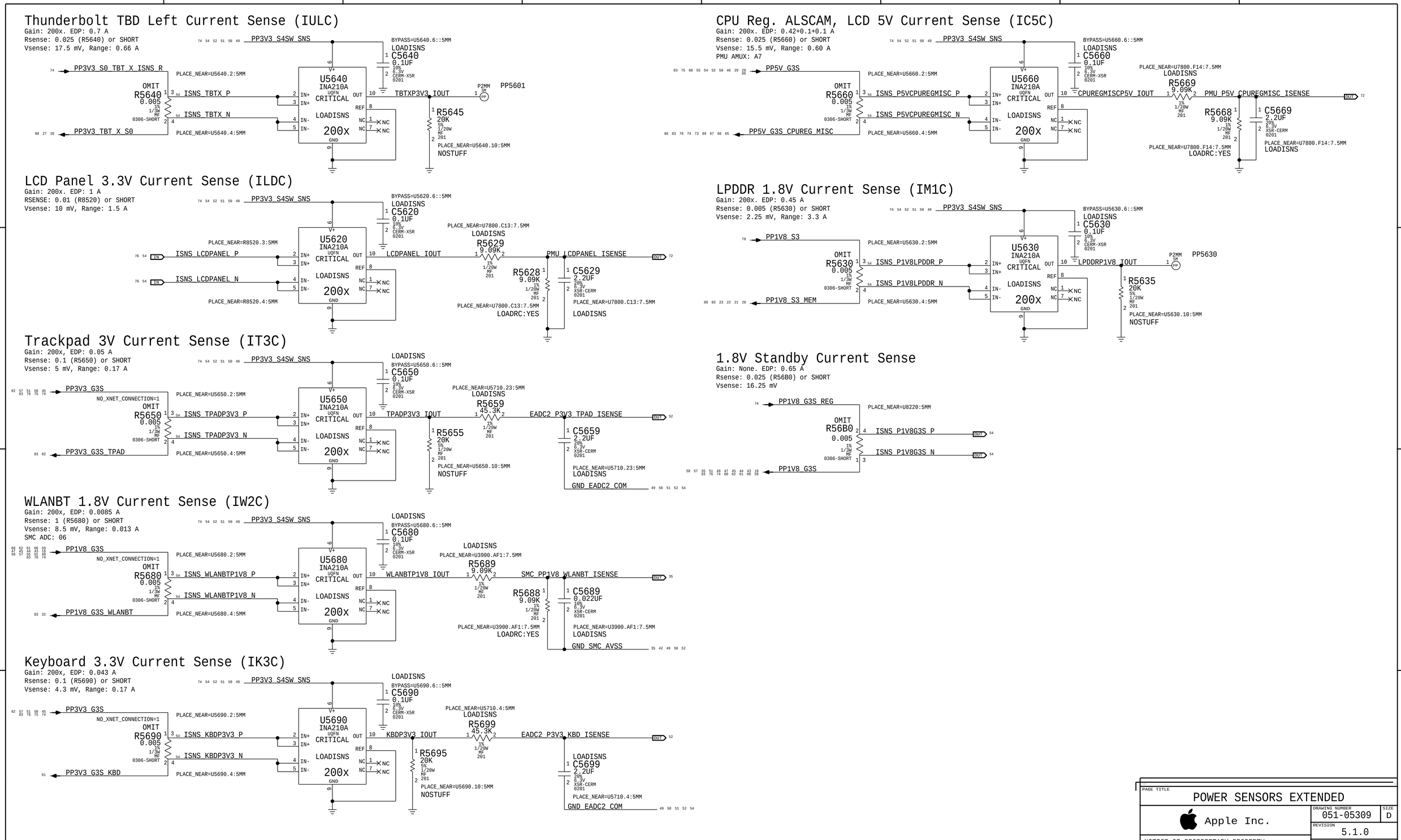

PART NUMBER	QTY	DESCRIPTION	REFERENCE DES	CRITICAL	BOM OPTION
117S0008	3	RES,MTL FLIM,100K,1/16W,0201,SMD,LF	R5628,R5668,R5688		LOADRC:NO

BOM_COST_GROUP=SENSORS

PAGE TITLE
POWER SENSORS EXTENDED

Apple Inc.

DRAWING NUMBER 051-05309
SIZE D
REVISION 5.1.0
BRANCH
PAGE 56 OF 500
SHEET 51 OF 98

NOTICE OF PROPRIETARY PROPERTY:
THE INFORMATION CONTAINED HEREIN IS THE PROPRIETARY PROPERTY OF APPLE INC.
THE POSESSOR AGREES TO THE FOLLOWING:
I TO MAINTAIN THIS DOCUMENT IN CONFIDENCE
II NOT TO REPRODUCE OR COPY IT
III NOT TO REVEAL OR PUBLISH IT IN WHOLE OR PART
IV ALL RIGHTS RESERVED

www.haojiyoubbs.com
QQ微信：181806465

Calpe 3.3V Input Current Left (IP3C)

Gain: 100x. EDP: 10.224 A
Rsense: 0.002 (R5780)
Vsense: 20.448 mV, Range: 12.5 A

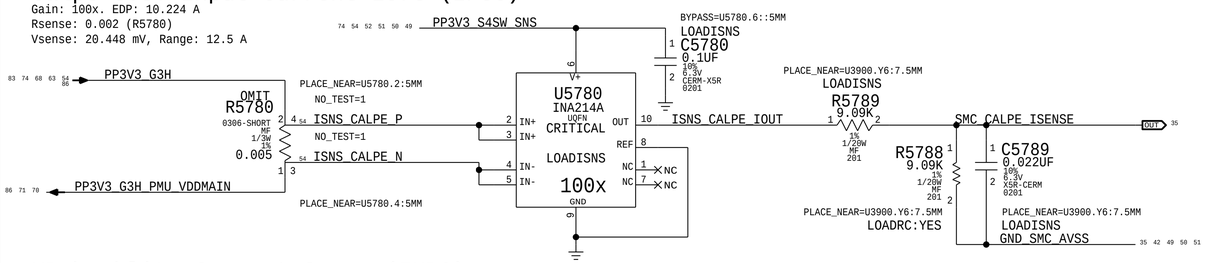

KB backlite Current Sense (IKBC)

Gain: 200x, EDP: 0.17 A
Rsense: 0.05 (R5730)
Vsense: 8.5 mV, Range: 0.33 A

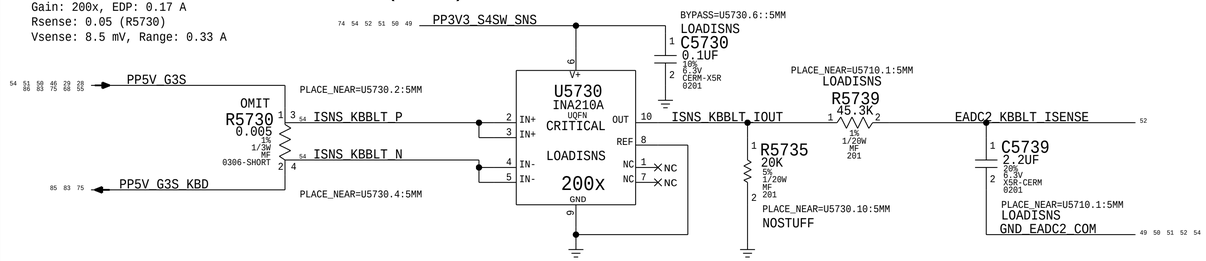

CPU SA Current Sense (ICSC)

Gain: 100X, EDP: 9.5 A
Rsense: 0.002 (R7270)
Vsense: 19 mV, Range: 15 A
PMU AMUX: B1

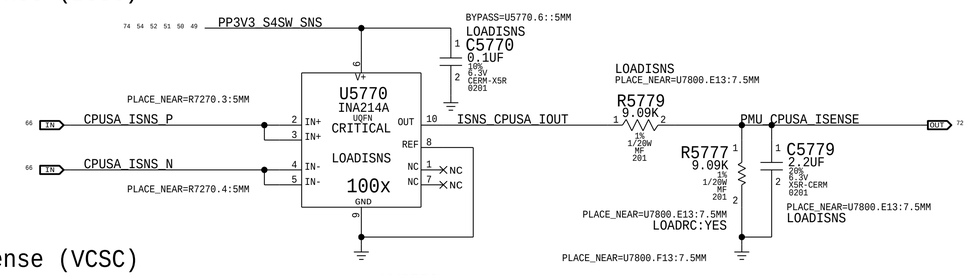

CPU SA Voltage Sense (VCSC)

PMU AMUX: B3

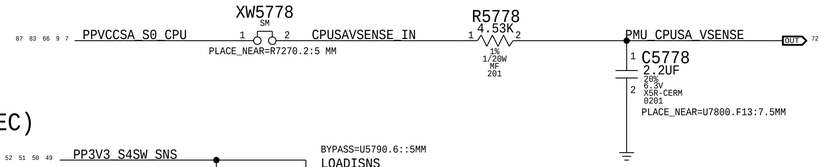

CPU EDRAM Current Sense (ICEC)

Gain: 200x, EDP: 6.2 A
Rsense: 0.002 (R7702) or SHORT
Vsense: 12.4 mV, Range: 7.5 A
PMU AMUX: A2

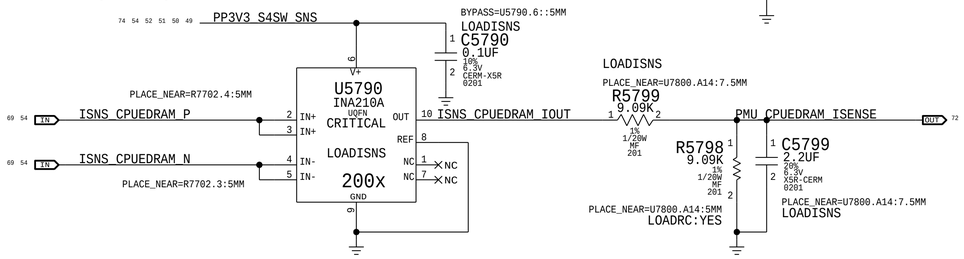

EADC2

(Write: 0x12 Read: 0x13)

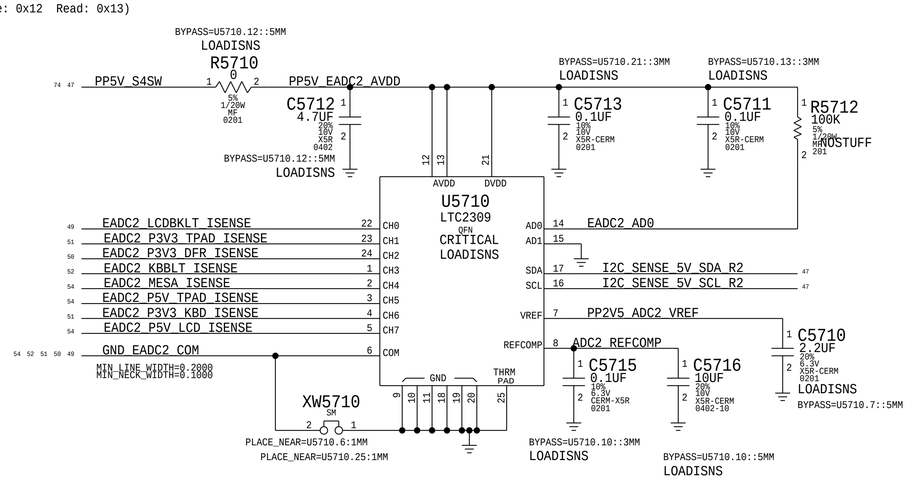

PART NUMBER	QTY	DESCRIPTION	REFERENCE DES	CRITICAL	BOM OPTION
117S0008	3	RES,MTL FLIM,100K,1/16W,0201,SMD,LF	R5777,R5788,R5798		LOADRC:NO

BOM_COST_GROUP=SENSORS

PAGE TITLE: POWER SENSORS EXTENDED 2

Apple Inc.

DRAWING NUMBER: 051-05309 SIZE: D
REVISION: 5.1.0
BRANCH:
PAGE: 57 OF 500
SHEET: 52 OF 98

NOTICE OF PROPRIETARY PROPERTY:
THE INFORMATION CONTAINED HEREIN IS THE PROPRIETARY PROPERTY OF APPLE INC.
THE POSESSOR AGREES TO THE FOLLOWING:
I TO MAINTAIN THIS DOCUMENT IN CONFIDENCE
II NOT TO REPRODUCE OR COPY IT
III NOT TO REVEAL OR PUBLISH IT IN WHOLE OR PART
IV ALL RIGHTS RESERVED

www.haojiyoubbs.com
QQ微信：181806465

Thermal Sensor A:
TBT Die, NAND, WIFI, I/O proximity

I2C Write: 0x90, I2C Read: 0x91

TBT Die Thermal Diode (TTLD)

Placement Note:
The P leg connects to THERMDA of TBT die.
The N leg connectd to GND pin close to THERMDA.

WIFI Proximity (TW0P)

Placement Note:
BOTTOM side of WIFI/BT module

NAND Proximity #1 (TH0b)

Placement note:
BOTTOM side between NAND devices

NAND Proximity #2 (TH0a)

Placement note:
TOP side between NAND devices

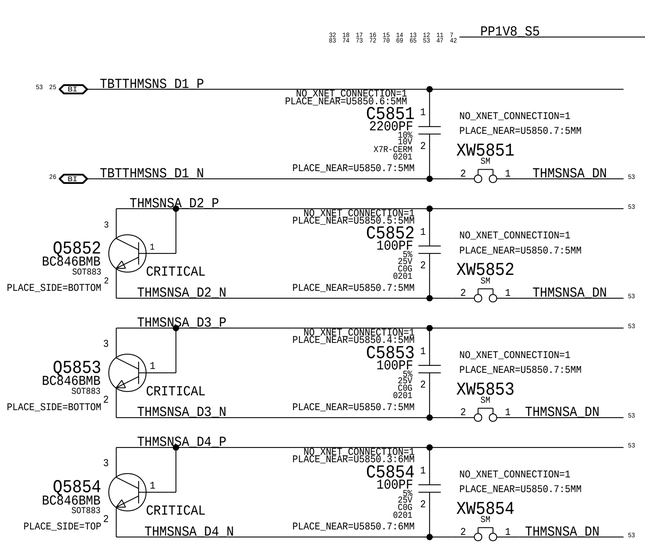

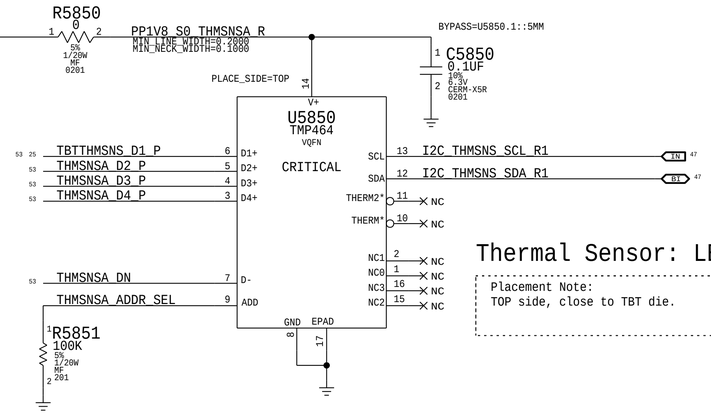

Thermal Sensor: LEFT IO proximity (TI0P)

Placement Note:
TOP side, close to TBT die.

Thermal Sensor B
Fin Stack, CPU Proximity, Memory Proximity, and CPU VR

I2C Write: 0x92, I2C Read: 0x93

Thermal Diode: Ambient (TMLB)

Placement Note:
Airflow thermal indicator, TOP side.

CPU Proximity (TC0P)

Placement Note:
TOP side of CPU.

Memory Proximity (TM0P)

Placement Note:
TOP side between main memory devices.

Memory Proximity (TM1P)

Placement Note:
BOTTOM side between main memory devices.

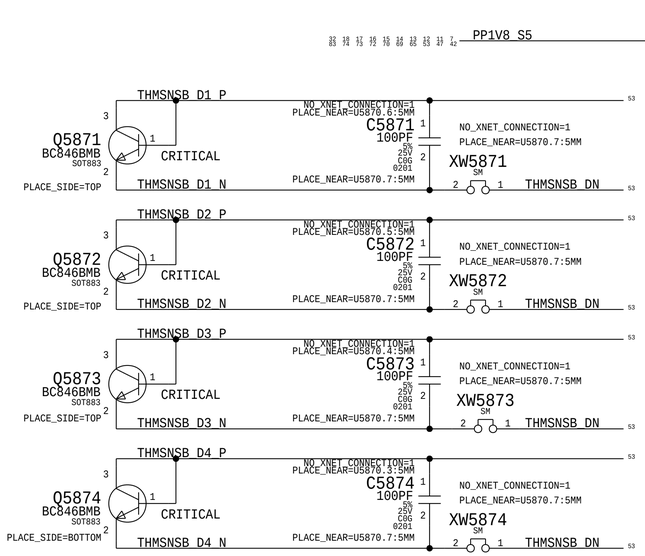

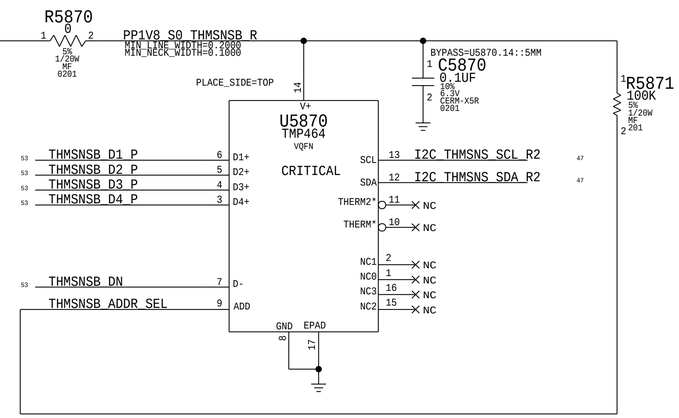

Thermal Sensor: Fin Stack (Th1H)

Placement Note:
TOP side, top right of MLB.

BOM_COST_GROUP=SENSORS

PAGE TITLE
THERMAL SENSORS

Apple Inc.

DRAWING NUMBER 051-05309 SIZE D
REVISION 5.1.0
BRANCH
PAGE 58 OF 500
SHEET 53 OF 98

NOTICE OF PROPRIETARY PROPERTY:
THE INFORMATION CONTAINED HEREIN IS THE PROPRIETARY PROPERTY OF APPLE INC.
THE POSESSOR AGREES TO THE FOLLOWING:
I TO MAINTAIN THIS DOCUMENT IN CONFIDENCE
II NOT TO REPRODUCE OR COPY IT
III NOT TO REVEAL OR PUBLISH IT IN WHOLE OR PART
IV ALL RIGHTS RESERVED

www.haojiyoubbs.com
QQ微信：181806465

Trackpad 5V Current Sense (IT5C)

Gain: 200x, EDP: 0.0055 A
Rsense: 0.1 (R5940) or SHORT
Vsense: 0.55 mV, Range: 0.17 A

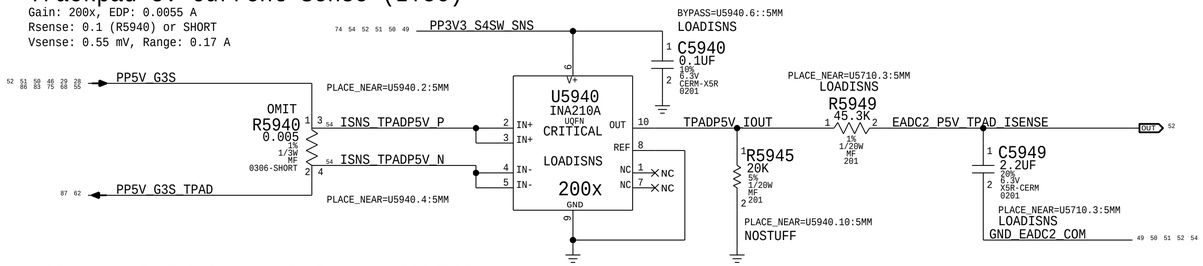

LCD Panel 5V Current Sense (IL5C)

Gain: 200x, EDP: 0.1 A
Rsense: 0.1 (R8521) or SHORT
Vsense: 10 mV, Range: 0.17 A

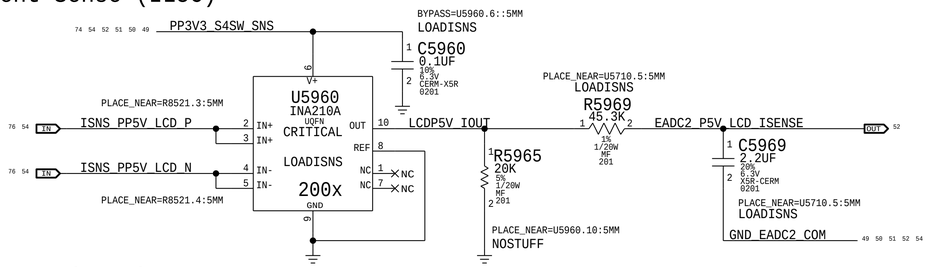

Ocarina Current Sense (IHCC)

Gain: 100x, EDP: 2.139 A
Rsense: 0.01 (R5920) [Production]
Vsense: 21.4 mV, Range: 3.0 A
MUX: A5

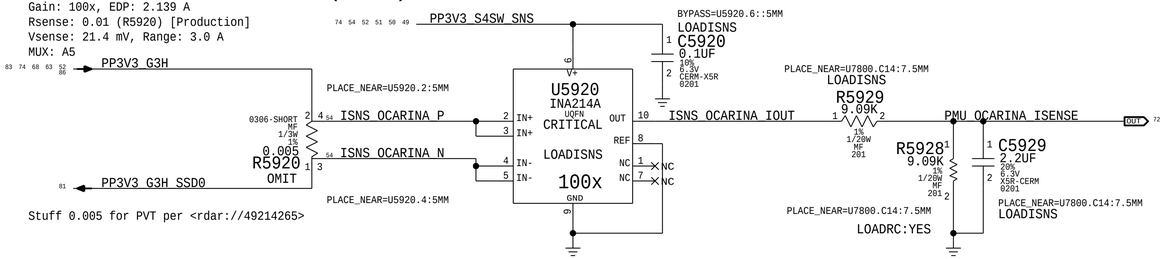

Stuff 0.005 for PVT per <rdar://49214265>

MESA Current Sense (IIDC)

Gain: 200x, EDP: 0.176 A
Rsense: 0.050 (R5530) or SHORT
Vsense: 8.8 mV, Range: 0.33 A

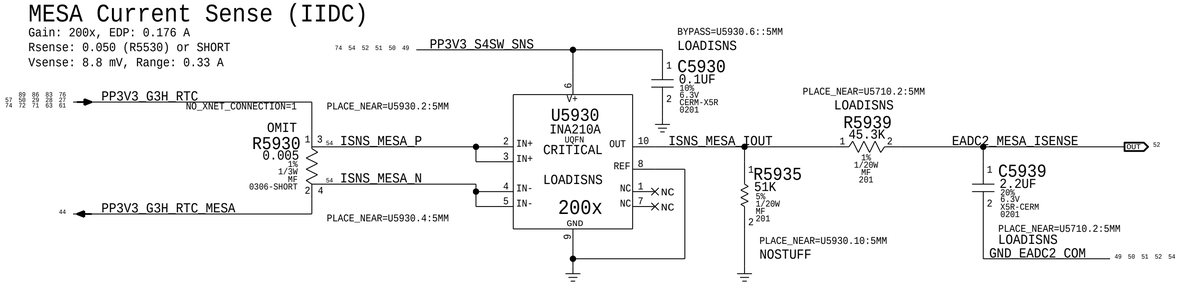

Probe Points for Power Validation

TP5901	ISNS_HS_CPU_P	PLACE_SIDE=TOP	PLACE_NEAR=R5400:5MM
TP5902	ISNS_HS_CPU_N	PLACE_SIDE=TOP	PLACE_NEAR=R5400:5MM
TP5903	ISNS_HS_OTHER5V_P	PLACE_SIDE=TOP	PLACE_NEAR=R5410:6MM
TP5904	ISNS_HS_OTHER5V_N	PLACE_SIDE=TOP	PLACE_NEAR=R5410:6MM
TP5905	ISNS_HS_OTHER3V3_P	PLACE_SIDE=TOP	PLACE_NEAR=R5440:5MM
TP5906	ISNS_HS_OTHER3V3_N	PLACE_SIDE=TOP	PLACE_NEAR=R5440:5MM
TP5907	ISNS_HS_3V3RTC_P	PLACE_SIDE=TOP	PLACE_NEAR=R5420:5MM
TP5908	ISNS_HS_3V3RTC_N	PLACE_SIDE=TOP	PLACE_NEAR=R5420:5MM
TP5909	ISNS_SSDNAND_P	PLACE_SIDE=TOP	PLACE_NEAR=R5460:5MM
TP5910	ISNS_SSDNAND_N	PLACE_SIDE=TOP	PLACE_NEAR=R5460:5MM
TP5911	ISNS_LCDBKLT_P	PLACE_SIDE=TOP	PLACE_NEAR=R8400:30MM
TP5912	ISNS_LCDBKLT_N	PLACE_SIDE=TOP	PLACE_NEAR=R8400:30MM
TP5913	ISNS_SPKRAMP_LEFT_P	PLACE_SIDE=TOP	PLACE_NEAR=R54A0:5MM
TP5914	ISNS_SPKRAMP_LEFT_N	PLACE_SIDE=TOP	PLACE_NEAR=R54A0:5MM
TP5915	ISNS_SPKRAMP_RIGHT_P	PLACE_SIDE=TOP	PLACE_NEAR=R54B0:5MM
TP5916	ISNS_SPKRAMP_RIGHT_N	PLACE_SIDE=TOP	PLACE_NEAR=R54B0:5MM
TP5917	CHGR_CSI_R_P	PLACE_SIDE=TOP	PLACE_NEAR=R7020:5MM
TP5918	CHGR_CSI_R_N	PLACE_SIDE=TOP	PLACE_NEAR=R7020:5MM
TP5919	CHGR_AMON	PLACE_SIDE=TOP	
TP5981		PLACE_SIDE=TOP	PLACE_NEAR=TP5919:5MM
TP5920	CHGR_CSO_R_P	PLACE_SIDE=TOP	PLACE_NEAR=R7060:30MM
TP5921	CHGR_CSO_R_N	PLACE_SIDE=TOP	PLACE_NEAR=R7060:30MM
TP5922	CHGR_BMON	PLACE_SIDE=TOP	
TP5982		PLACE_SIDE=TOP	PLACE_NEAR=TP5922:5MM
TP5923	PVCCIOS0_CS_P	PLACE_SIDE=TOP	PLACE_NEAR=R8102:5MM
TP5924	PVCCIOS0_CS_N	PLACE_SIDE=TOP	PLACE_NEAR=R8102:5MM
TP5925	ISNS_CPUDDR_P	PLACE_SIDE=TOP	PLACE_NEAR=R8118:5MM
TP5926	ISNS_CPUDDR_N	PLACE_SIDE=TOP	PLACE_NEAR=R8118:5MM
TP5927	ISNS_CPUVDDQ_P	PLACE_SIDE=TOP	PLACE_NEAR=R5510:5MM
TP5928	ISNS_CPUVDDQ_N	PLACE_SIDE=TOP	PLACE_NEAR=R5510:5MM
TP5929	ISNS_DFR3V3_P	PLACE_SIDE=TOP	PLACE_NEAR=R5520:5MM
TP5930	ISNS_DFR3V3_N	PLACE_SIDE=TOP	PLACE_NEAR=R5520:5MM
TP5931	ISNS_WLANBTP3V3_P	PLACE_SIDE=TOP	PLACE_NEAR=R5530:5MM
TP5932	ISNS_WLANBTP3V3_N	PLACE_SIDE=TOP	PLACE_NEAR=R5530:5MM
TP5933	ISNS_CPUVR_P	PLACE_SIDE=TOP	PLACE_NEAR=R5542:30MM
TP5934	ISNS_CPUVR_N	PLACE_SIDE=TOP	PLACE_NEAR=R5543:30MM
TP5935	ISNS_CPUGT_P	PLACE_SIDE=TOP	PLACE_NEAR=R5582:10MM
TP5936	ISNS_CPUGT_N	PLACE_SIDE=TOP	PLACE_NEAR=R5583:10MM
TP5937	ISNS_TBTX_P	PLACE_SIDE=TOP	PLACE_NEAR=R5640:5MM
TP5938	ISNS_TBTX_N	PLACE_SIDE=TOP	PLACE_NEAR=R5640:5MM
TP5939	ISNS_LCDPANEL_P	PLACE_SIDE=TOP	PLACE_NEAR=R8520:5MM
TP5940	ISNS_LCDPANEL_N	PLACE_SIDE=TOP	PLACE_NEAR=R8520:5MM
TP5941	ISNS_TPADP3V3_P	PLACE_SIDE=TOP	PLACE_NEAR=R5650:10MM
TP5942	ISNS_TPADP3V3_N	PLACE_SIDE=TOP	PLACE_NEAR=R5650:10MM
TP5943	ISNS_WLANBTP1V8_P	PLACE_SIDE=TOP	PLACE_NEAR=R5680:5MM
TP5944	ISNS_WLANBTP1V8_N	PLACE_SIDE=TOP	PLACE_NEAR=R5680:5MM
TP5945	ISNS_CALPE_P	PLACE_SIDE=TOP	PLACE_NEAR=R5780:5MM
TP5946	ISNS_CALPE_N	PLACE_SIDE=TOP	PLACE_NEAR=R5780:5MM
TP5947	ISNS_KBBLT_P	PLACE_SIDE=TOP	PLACE_NEAR=R5730:5MM
TP5948	ISNS_KBBLT_N	PLACE_SIDE=TOP	PLACE_NEAR=R5730:5MM
TP5949	CPUSA_ISNS_R_P	PLACE_SIDE=TOP	PLACE_NEAR=R7274:5MM
TP5950	CPUSA_ISNS_R_N	PLACE_SIDE=TOP	PLACE_NEAR=R7272:5MM
TP5951	ISNS_CPUEDRAM_P	PLACE_SIDE=TOP	PLACE_NEAR=R7702:5MM
TP5952	ISNS_CPUEDRAM_N	PLACE_SIDE=TOP	PLACE_NEAR=R7702:5MM
TP5953	ISNS_TPADP5V_P	PLACE_SIDE=TOP	PLACE_NEAR=R5940:10MM
TP5954	ISNS_TPADP5V_N	PLACE_SIDE=TOP	PLACE_NEAR=R5940:10MM
TP5955	ISNS_PP5V_LCD_P	PLACE_SIDE=TOP	PLACE_NEAR=R8521:5MM
TP5956	ISNS_PP5V_LCD_N	PLACE_SIDE=TOP	PLACE_NEAR=R8521:5MM
TP5957	ISNS_OCARINA_P	PLACE_SIDE=TOP	PLACE_NEAR=R5920:5MM
TP5958	ISNS_OCARINA_N	PLACE_SIDE=TOP	PLACE_NEAR=R5920:5MM
TP5959	ISNS_MESA_P	PLACE_SIDE=TOP	PLACE_NEAR=R5930:5MM
TP5960	ISNS_MESA_N	PLACE_SIDE=TOP	PLACE_NEAR=R5930:5MM
TP5961	PPVPCORE_S5	PLACE_SIDE=TOP	PLACE_NEAR=L7820:5MM
TP5962	PVCC_FB_P	PLACE_SIDE=TOP	PLACE_NEAR=R0850:10MM
TP5963	PP1V_PRIM	PLACE_SIDE=TOP	PLACE_NEAR=L7821:5MM
TP5964	P1VPRIM_FB_R	PLACE_SIDE=TOP	PLACE_NEAR=R0853:10MM
TP5965	ISNS_KBDP3V3_P	PLACE_SIDE=TOP	PLACE_NEAR=R5690:5MM
TP5966	ISNS_KBDP3V3_N	PLACE_SIDE=TOP	PLACE_NEAR=R5690:5MM
TP5967	ISNS_P5VCPUREGMISC_P	PLACE_SIDE=TOP	PLACE_NEAR=R5660:5MM
TP5968	ISNS_P5VCPUREGMISC_N	PLACE_SIDE=TOP	PLACE_NEAR=R5660:5MM
TP5969	ISNS_P1V8LPDDR_P	PLACE_SIDE=TOP	PLACE_NEAR=R5630:5MM
TP5970	ISNS_P1V8LPDDR_N	PLACE_SIDE=TOP	PLACE_NEAR=R5630:5MM
TP5971	ISNS_P1V8G3S_P	PLACE_SIDE=TOP	PLACE_NEAR=R56B0:5MM
TP5972	ISNS_P1V8G3S_N	PLACE_SIDE=TOP	PLACE_NEAR=R56B0:5MM
TP5983		PLACE_SIDE=TOP	
TP5984		PLACE_SIDE=TOP	
TP5985		PLACE_SIDE=TOP	
TP5986		PLACE_SIDE=TOP	

BOM_COST_GROUP=SENSORS

PART NUMBER	QTY	DESCRIPTION	REFERENCE DES	CRITICAL	BOM OPTION
117S0008	1	RES,MTL FLIM,100K,1/16W,0201,SMD,LF	R5928		LOADRC:NO

PAGE TITLE
POWER SENSORS EXTENDED 3

Apple Inc.

DRAWING NUMBER 051-05309 SIZE D
REVISION 5.1.0
BRANCH
PAGE 59 OF 500
SHEET 54 OF 98

NOTICE OF PROPRIETARY PROPERTY:
THE INFORMATION CONTAINED HEREIN IS THE PROPRIETARY PROPERTY OF APPLE INC.
THE POSESSOR AGREES TO THE FOLLOWING:
I TO MAINTAIN THIS DOCUMENT IN CONFIDENCE
II NOT TO REPRODUCE OR COPY IT
III NOT TO REVEAL OR PUBLISH IT IN WHOLE OR PART
IV ALL RIGHTS RESERVED

www.haojiyoubbs.com
QQ微信：181806465

FAN CONTROL

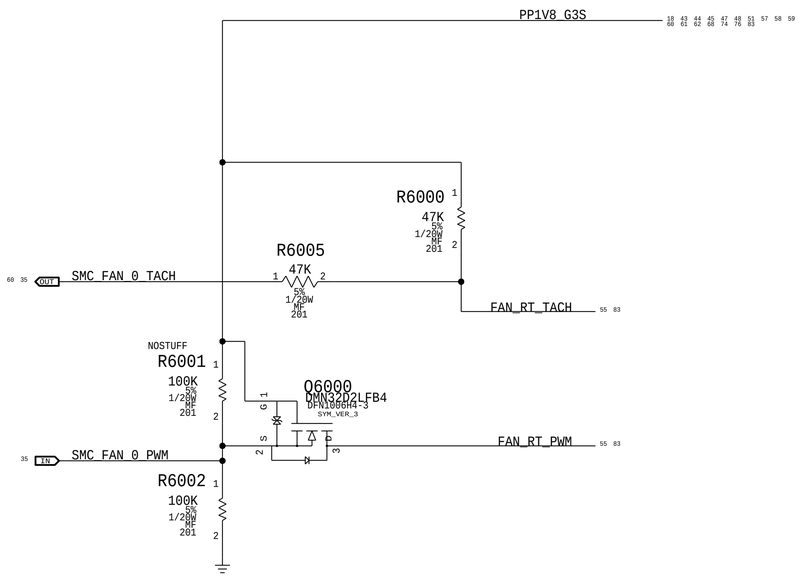

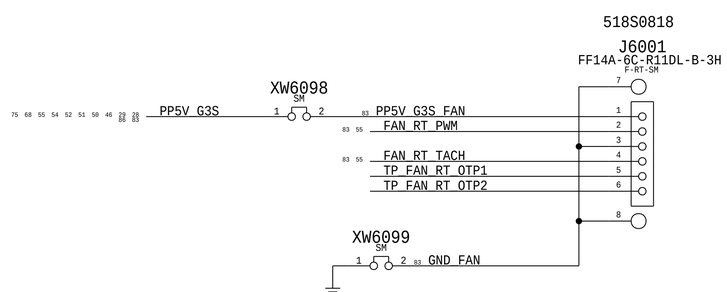

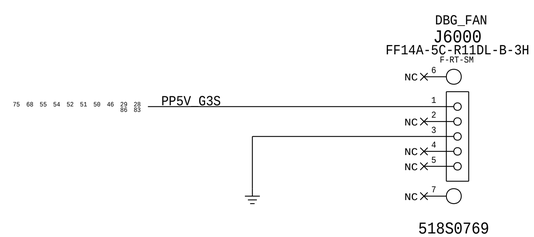

BOM_COST_GROUP=FAN

PAGE TITLE
Fans/SMC/AMUX Support

Apple Inc.

DRAWING NUMBER 051-05309
SIZE D
REVISION 5.1.0
BRANCH
PAGE 60 OF 500
SHEET 55 OF 98

NOTICE OF PROPRIETARY PROPERTY:
THE INFORMATION CONTAINED HEREIN IS THE PROPRIETARY PROPERTY OF APPLE INC.
THE POSESSOR AGREES TO THE FOLLOWING:
I TO MAINTAIN THIS DOCUMENT IN CONFIDENCE
II NOT TO REPRODUCE OR COPY IT
III NOT TO REVEAL OR PUBLISH IT IN WHOLE OR PART
IV ALL RIGHTS RESERVED

www.haojiyoubbs.com
QQ微信：181806465

BOM_COST_GROUP=AUDIO

SYNC_MASTER= SYNC_DATE=

PAGE TITLE

AUDIO PLACEHOLDER

Apple Inc.

DRAWING NUMBER 051-05309

SIZE D

REVISION 5.1.0

BRANCH

PAGE 62 OF 500

SHEET 56 OF 98

NOTICE OF PROPRIETARY PROPERTY:

THE INFORMATION CONTAINED HEREIN IS THE PROPRIETARY PROPERTY OF APPLE INC.
THE POSESSOR AGREES TO THE FOLLOWING:
I TO MAINTAIN THIS DOCUMENT IN CONFIDENCE
II NOT TO REPRODUCE OR COPY IT
III NOT TO REVEAL OR PUBLISH IT IN WHOLE OR PART
IV ALL RIGHTS RESERVED

www.haojiyoubbs.com
QQ微信：181806465

AUDIO JACK CODEC I2C ADDRESS		
AD1	AD0	ADDRESS
GND	GND	0x48 <--
GND	1.8V	0x49
1.8V	GND	0x4A
1.8V	1.8V	0x4B

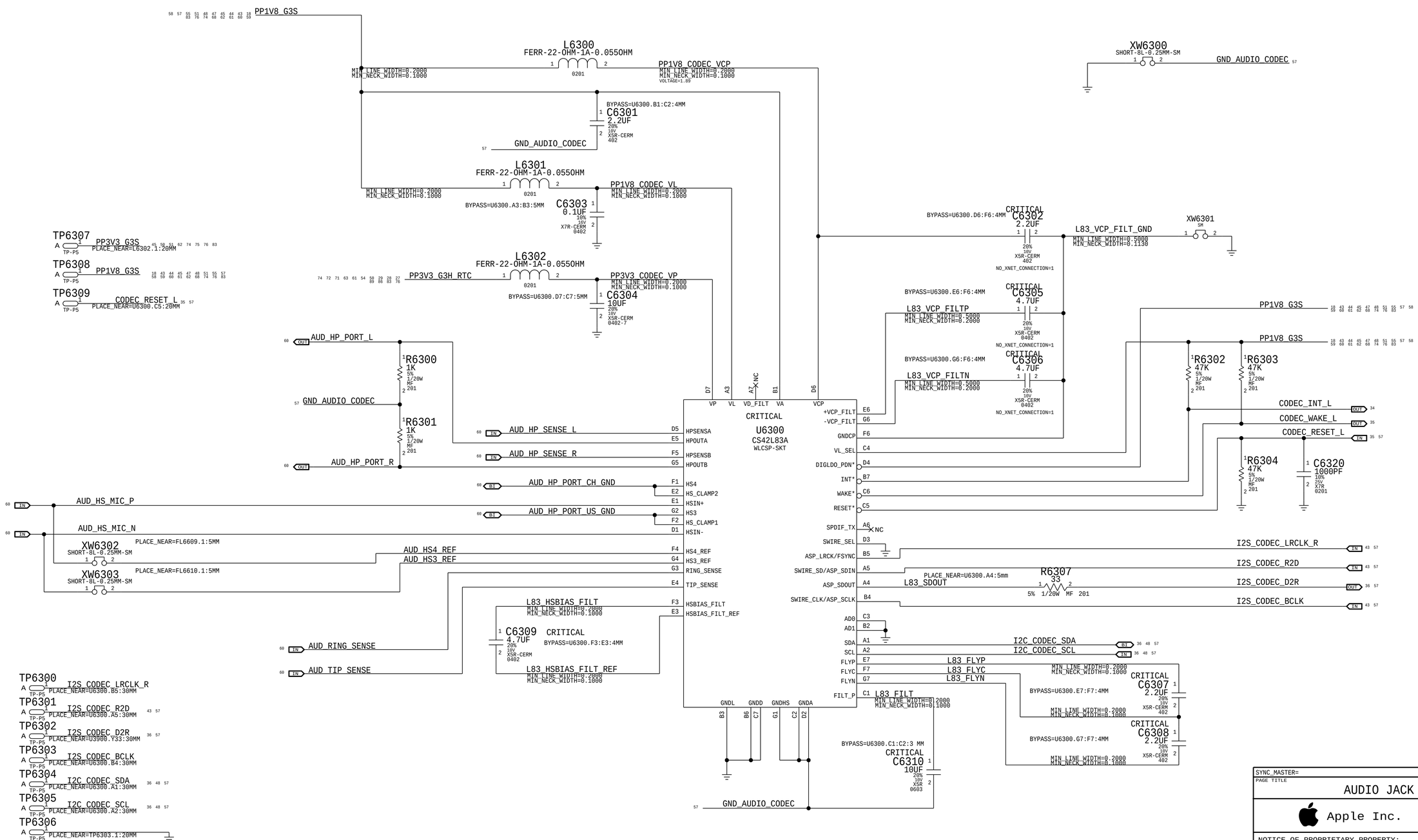

BOM_COST_GROUP=AUDIO

SYNC_MASTER= SYNC_DATE=

PAGE TITLE: AUDIO JACK CODEC

Apple Inc.

DRAWING NUMBER: 051-05309 SIZE: D

REVISION: 5.1.0

BRANCH

PAGE: 63 OF 500

SHEET: 57 OF 98

NOTICE OF PROPRIETARY PROPERTY:
THE INFORMATION CONTAINED HEREIN IS THE PROPRIETARY PROPERTY OF APPLE INC.
THE POSESSOR AGREES TO THE FOLLOWING:
I TO MAINTAIN THIS DOCUMENT IN CONFIDENCE
II NOT TO REPRODUCE OR COPY IT
III NOT TO REVEAL OR PUBLISH IT IN WHOLE OR PART
IV ALL RIGHTS RESERVED

www.haojiyoubbs.com
QQ微信：181806465

2X MONO SPEAKER LEFT AMPLIFIERS

APN: 353S01252
GAIN: 0DBFS = xxVRMS

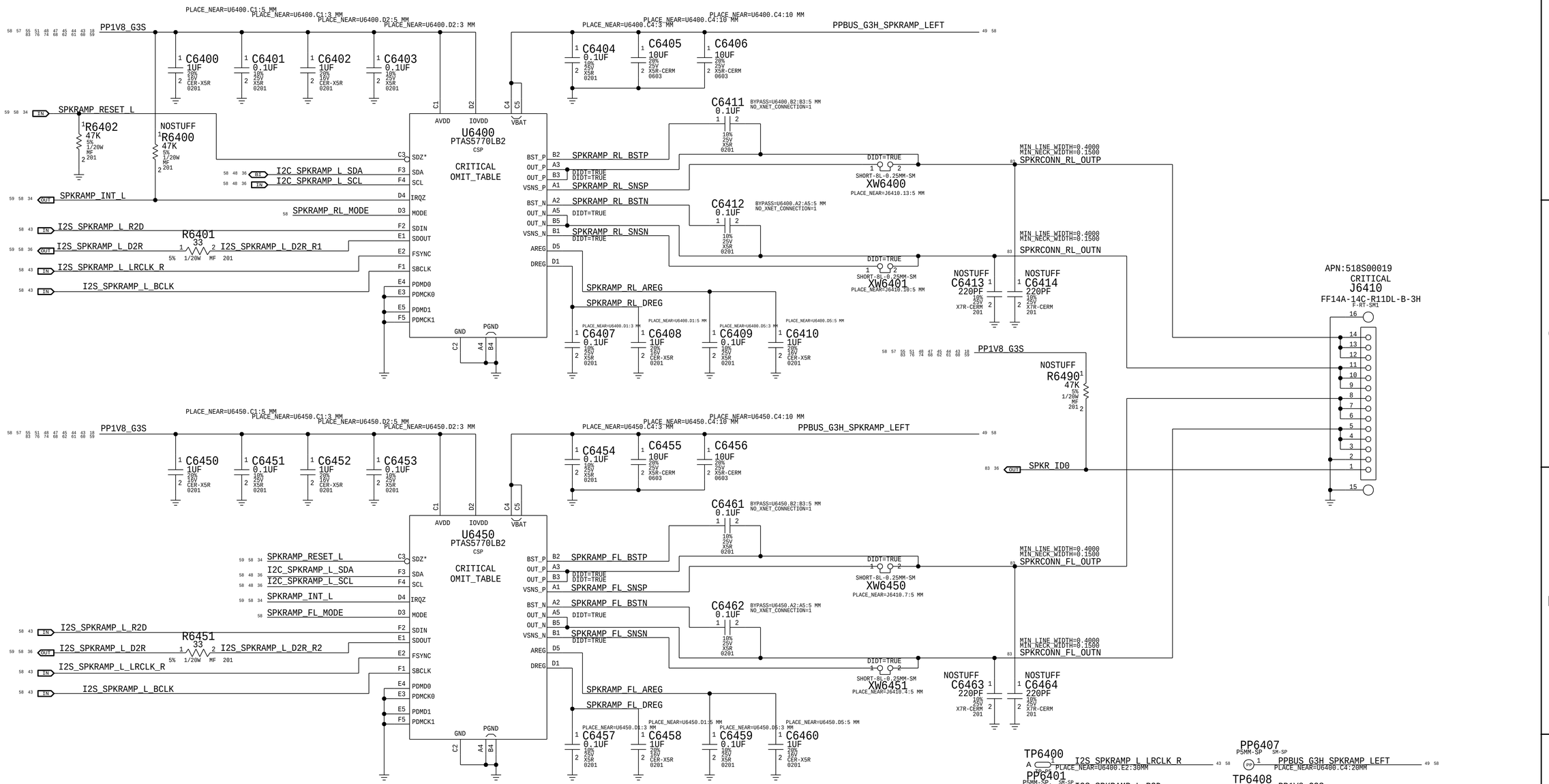

MODE PIN	I2C ADDR	CHANNEL
GND	0x31	REAR LEFT
470 to GND	0x32	FRONT LEFT
470 to IOVDD	0x33	REAR RIGHT
2k2 to GND	0x34	FRONT RIGHT
2k2 to IOVDD	0x35	
10k to GND	0x36	
10k to IOVDD	0x37	
47k to IOVDD	0x38	

PAGE TITLE
AUDIO LEFT AMPLIFIERS

Apple Inc.

DRAWING NUMBER 051-05309
SIZE D
REVISION 5.1.0
BRANCH
PAGE 64 OF 500
SHEET 58 OF 98

NOTICE OF PROPRIETARY PROPERTY:
THE INFORMATION CONTAINED HEREIN IS THE PROPRIETARY PROPERTY OF APPLE INC.
THE POSESSOR AGREES TO THE FOLLOWING:
I TO MAINTAIN THIS DOCUMENT IN CONFIDENCE
II NOT TO REPRODUCE OR COPY IT
III NOT TO REVEAL OR PUBLISH IT IN WHOLE OR PART
IV ALL RIGHTS RESERVED

www.haojiyoubbs.com
QQ微信：181806465

2X MONO SPEAKER RIGHT AMPLIFIERS

APN: 353S01252
GAIN: 0DBFS = xxVRMS

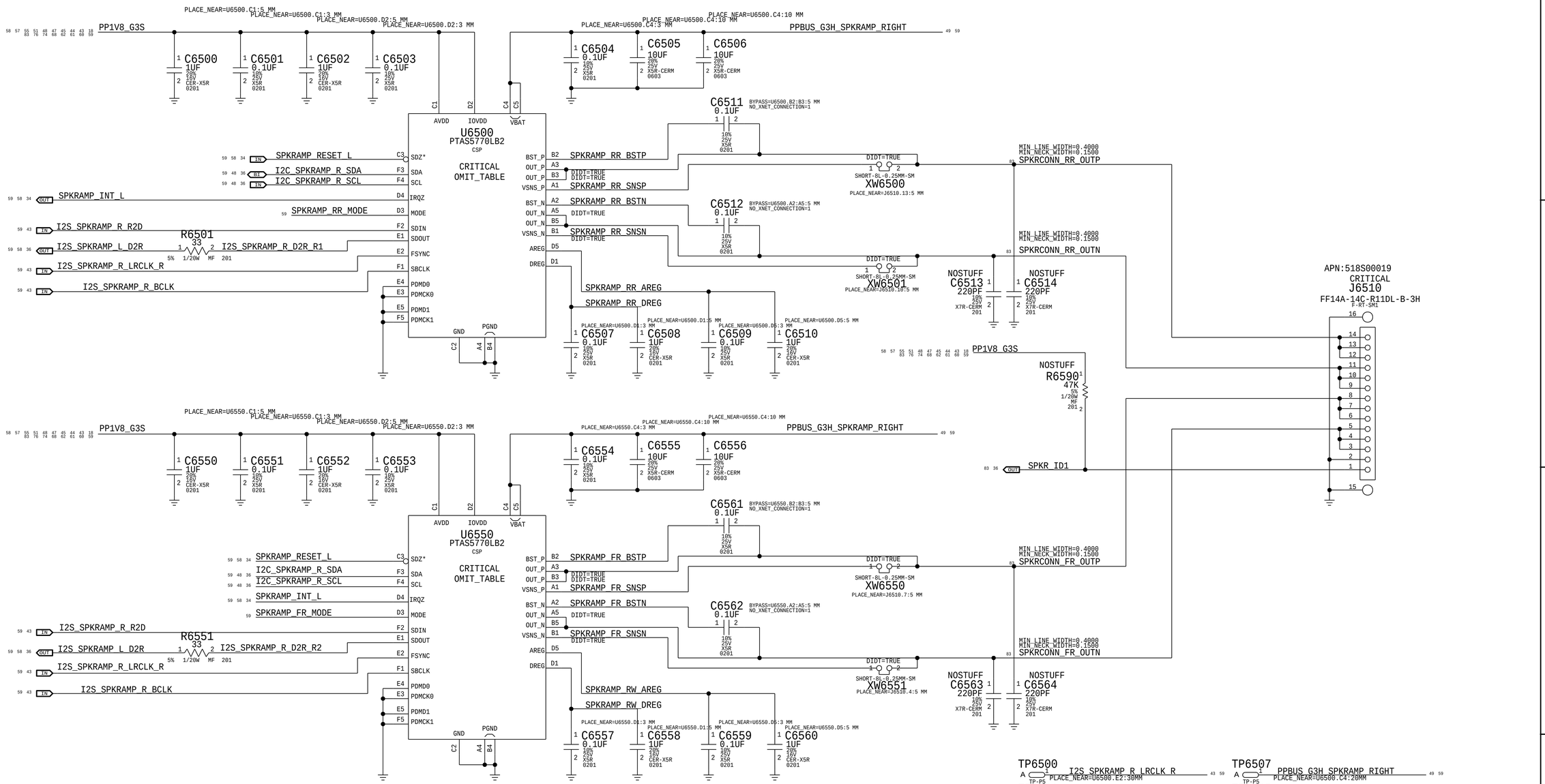

MODE PIN	I2C ADDR	CHANNEL
GND	0x31	LEFT REAR
470 to GND	0x32	LEFT FRONT
470 to IOVDD	0x33	RIGHT REAR
2k2 to GND	0x34	RIGHT FRONT
2k2 to IOVDD	0x35	
10k to GND	0x36	
10k to IOVDD	0x37	
47k to IOVDD	0x38	

SYNC_MASTER= SYNC_DATE=
PAGE TITLE
AUDIO RIGHT AMPLIFIERS

Apple Inc.

DRAWING NUMBER 051-05309 SIZE D
REVISION 5.1.0
BRANCH
PAGE 65 OF 500
SHEET 59 OF 98

NOTICE OF PROPRIETARY PROPERTY:
THE INFORMATION CONTAINED HEREIN IS THE PROPRIETARY PROPERTY OF APPLE INC.
THE POSESSOR AGREES TO THE FOLLOWING:
I TO MAINTAIN THIS DOCUMENT IN CONFIDENCE
II NOT TO REPRODUCE OR COPY IT
III NOT TO REVEAL OR PUBLISH IT IN WHOLE OR PART
IV ALL RIGHTS RESERVED

www.haojiyoubbs.com
QQ微信：181806465

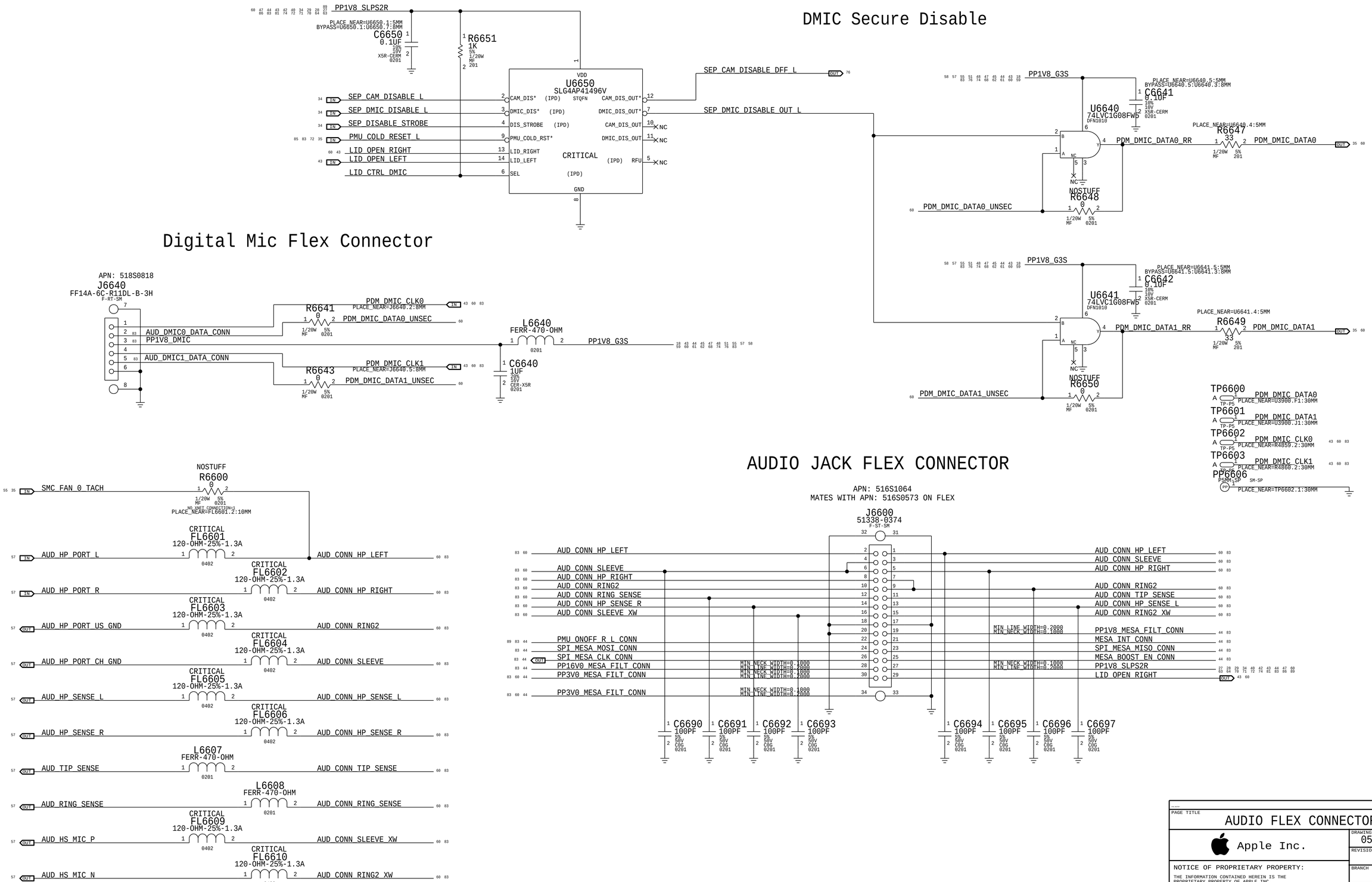

PAGE TITLE

AUDIO FLEX CONNECTORS

Apple Inc.

DRAWING NUMBER	051-05309
SIZE	D
REVISION	5.1.0
BRANCH	
PAGE	66 OF 500
SHEET	60 OF 98

NOTICE OF PROPRIETARY PROPERTY:
THE INFORMATION CONTAINED HEREIN IS THE PROPRIETARY PROPERTY OF APPLE INC.
THE POSESSOR AGREES TO THE FOLLOWING:
I TO MAINTAIN THIS DOCUMENT IN CONFIDENCE
II NOT TO REPRODUCE OR COPY IT
III NOT TO REVEAL OR PUBLISH IT IN WHOLE OR PART
IV ALL RIGHTS RESERVED

www.haojiyoubbs.com
QQ微信：181806465

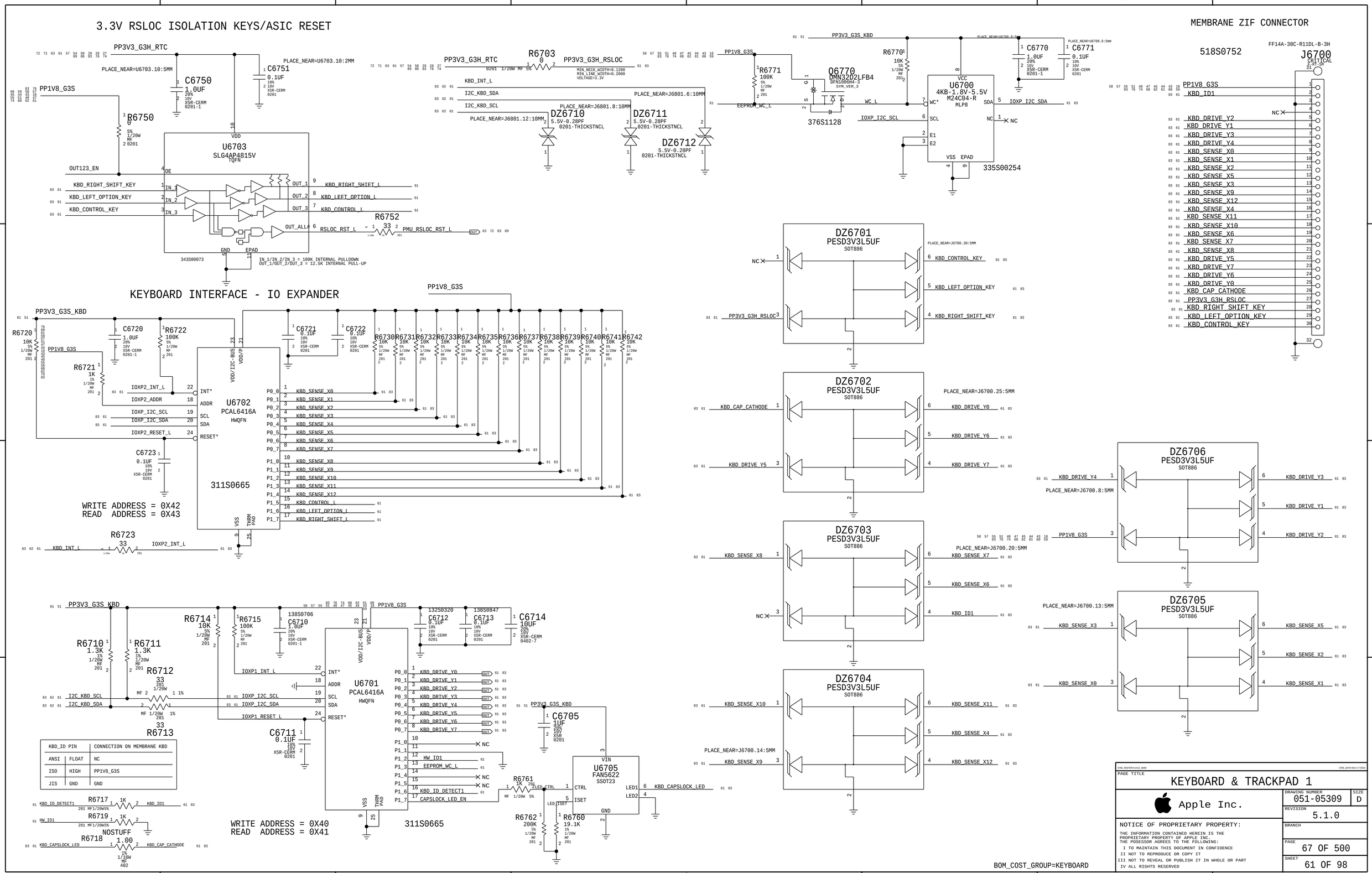

www.haojiyoubbs.com
QQ微信：181806465

Trackpad Level Shifting

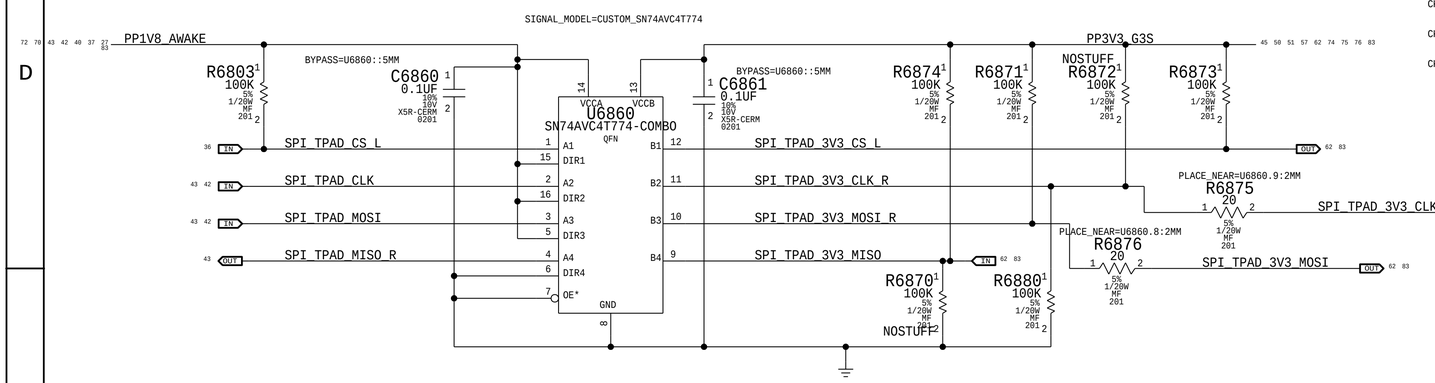

TPAD CONNECTOR

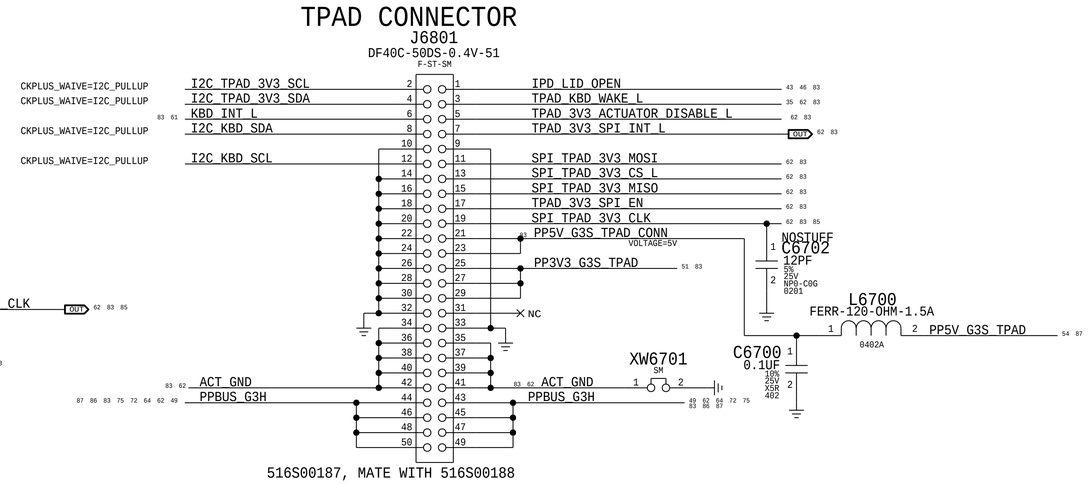

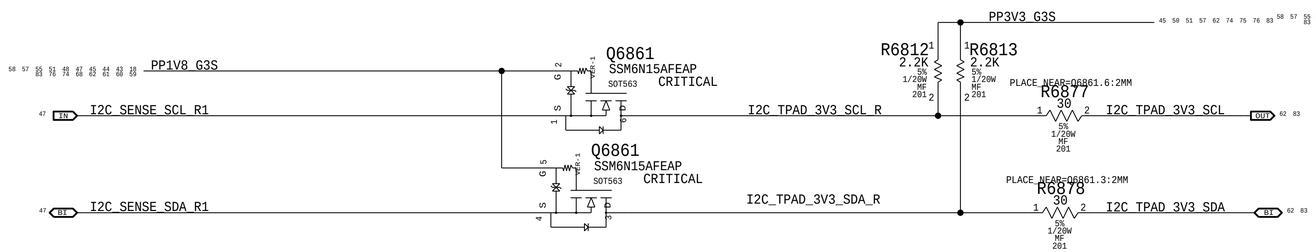

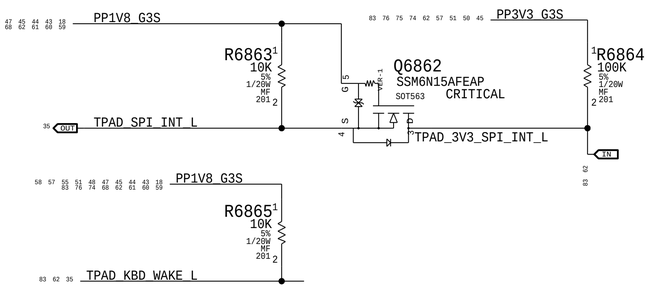

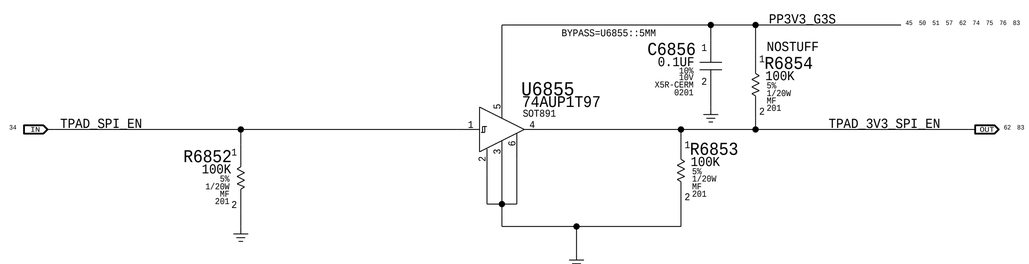

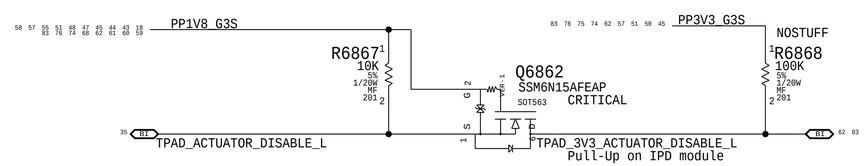

BOM_COST_GROUP=TRACKPAD

PAGE TITLE	Keyboard & Trackpad 2
	Apple Inc.
DRAWING NUMBER	051-05309
SIZE	D
REVISION	5.1.0
BRANCH	
PAGE	68 OF 500
SHEET	62 OF 98

NOTICE OF PROPRIETARY PROPERTY:
THE INFORMATION CONTAINED HEREIN IS THE PROPRIETARY PROPERTY OF APPLE INC.
THE POSESSOR AGREES TO THE FOLLOWING:
I TO MAINTAIN THIS DOCUMENT IN CONFIDENCE
II NOT TO REPRODUCE OR COPY IT
III NOT TO REVEAL OR PUBLISH IT IN WHOLE OR PART
IV ALL RIGHTS RESERVED

www.haojiyoubbs.com
QQ微信：181806465

BMU LOGIC CONNECTOR

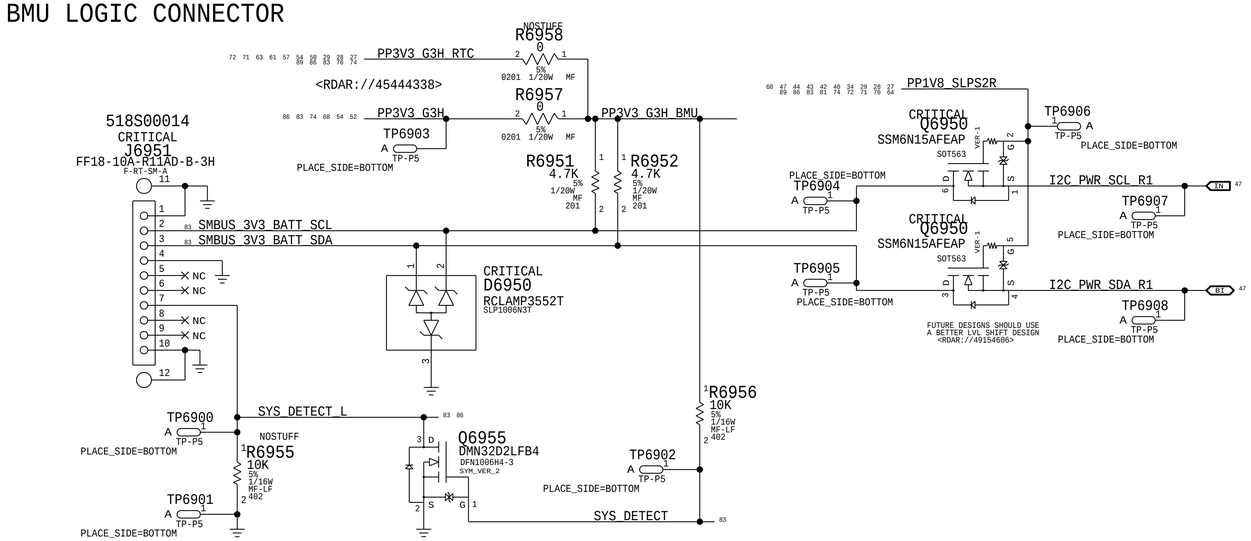

BATTERY (BMU) FLEX SOLDER PADS

BMU POWER FLEX IS SOLDERED TO MLB.

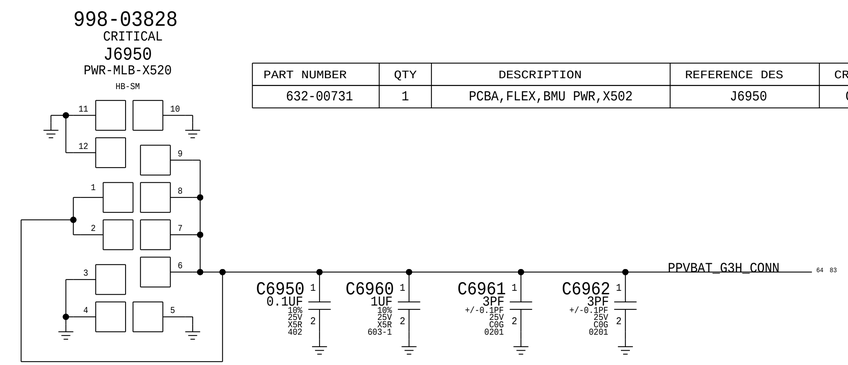

PART NUMBER	QTY	DESCRIPTION	REFERENCE DES	CRITICAL	BOM OPTION
632-00731	1	PCBA,FLEX,BMU PWR,X502	J6950	CRITICAL	

SMC Reset Circuit

Right Shift & Left Option Control
followed by ON OFF button press.

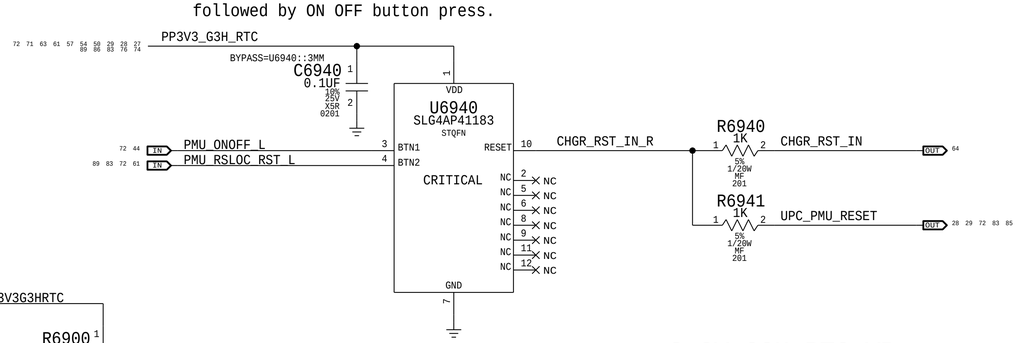

3.3V G3H RTC VR

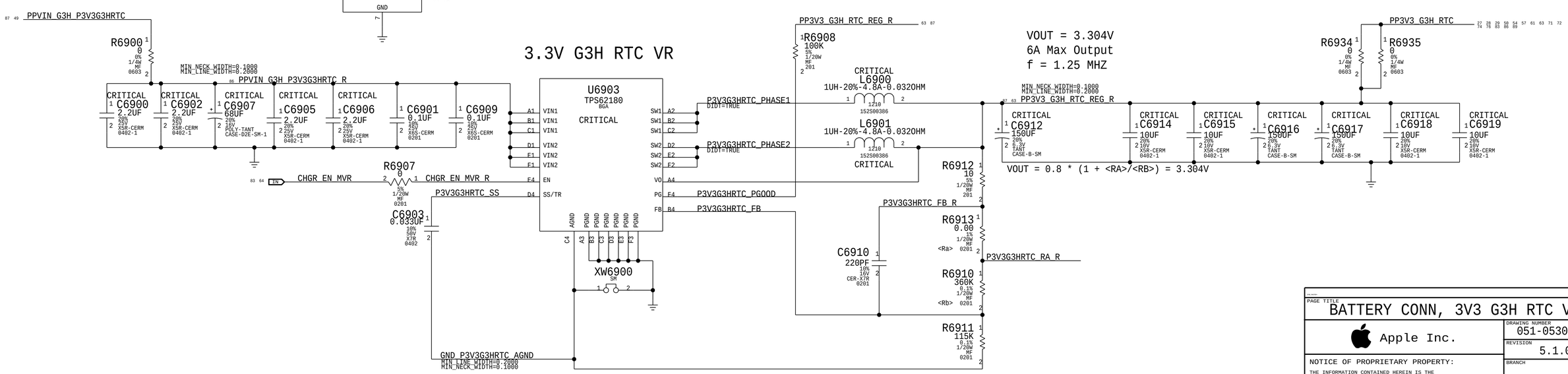

BOM_COST_GROUP=PLATFORM POWER

PAGE TITLE	BATTERY CONN, 3V3 G3H RTC VR
DRAWING NUMBER	051-05309
SIZE	D
REVISION	5.1.0
BRANCH	
PAGE	69 OF 500
SHEET	63 OF 98

Apple Inc.

NOTICE OF PROPRIETARY PROPERTY:
THE INFORMATION CONTAINED HEREIN IS THE PROPRIETARY PROPERTY OF APPLE INC.
THE POSESSOR AGREES TO THE FOLLOWING:
I TO MAINTAIN THIS DOCUMENT IN CONFIDENCE
II NOT TO REPRODUCE OR COPY IT
III NOT TO REVEAL OR PUBLISH IT IN WHOLE OR PART
IV ALL RIGHTS RESERVED

www.haojiyoubbs.com
QQ微信：181806465

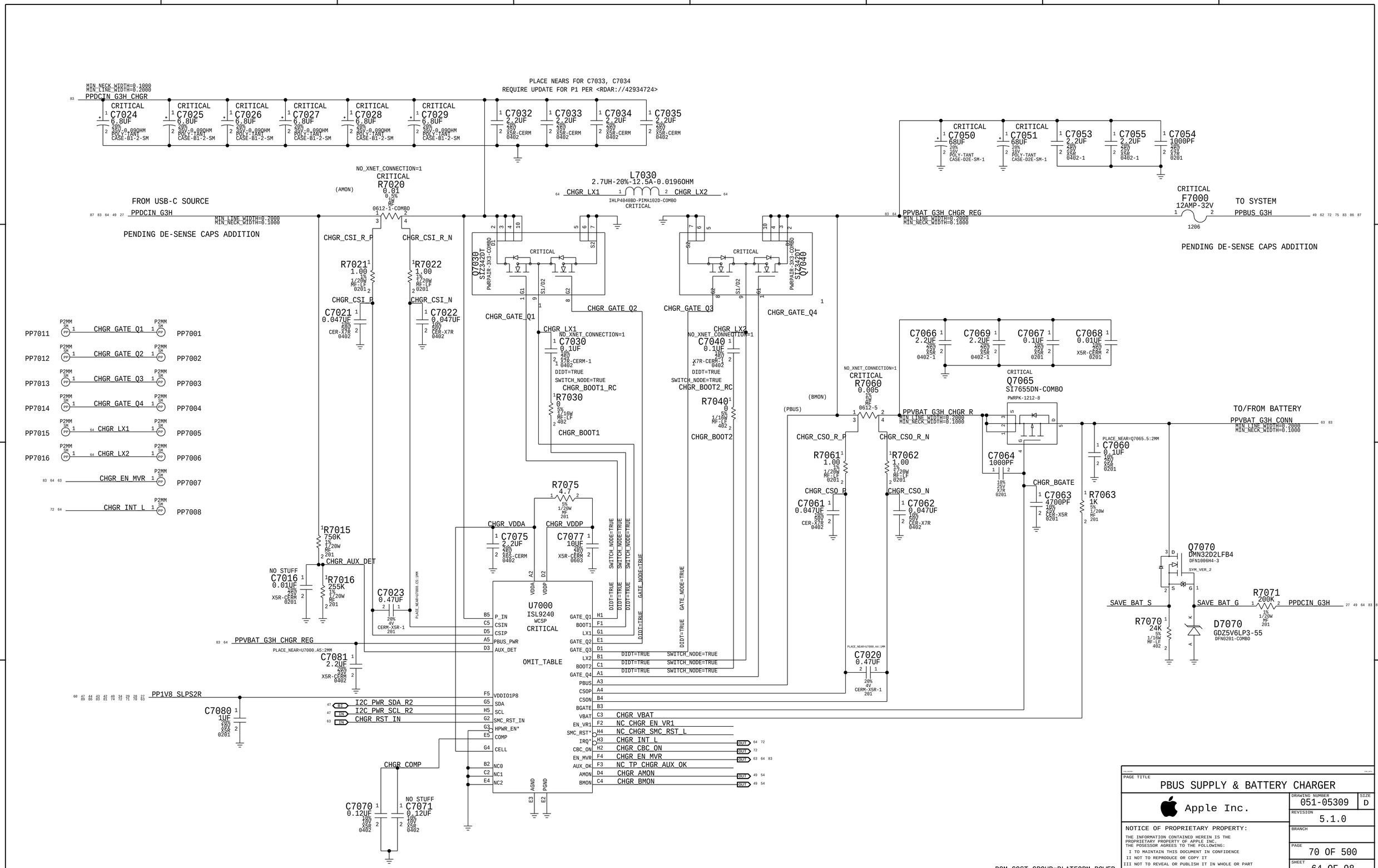

www.haojiyoubbs.com
QQ微信：181806465

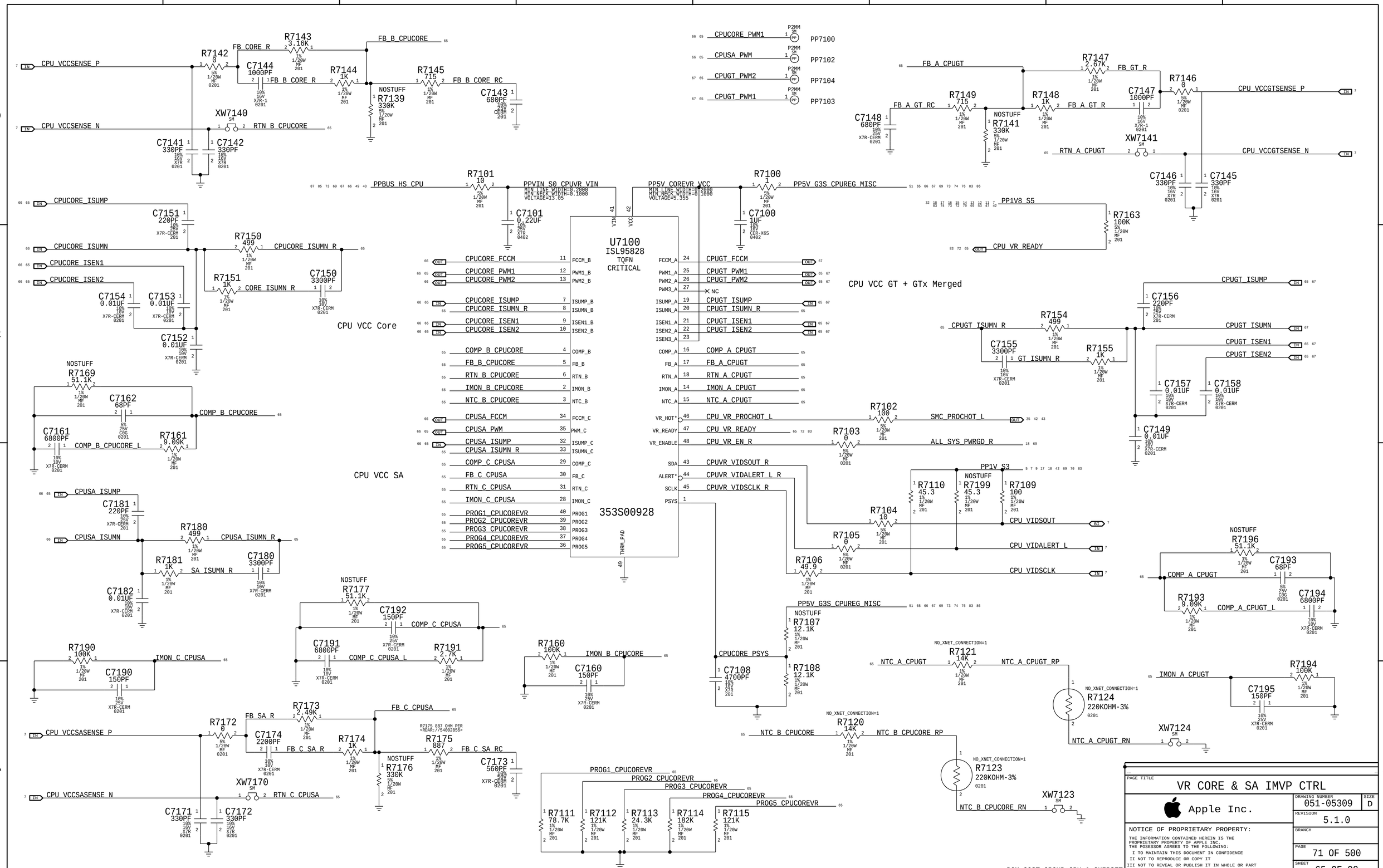

www.haojiyoubbs.com
QQ微信：181806465

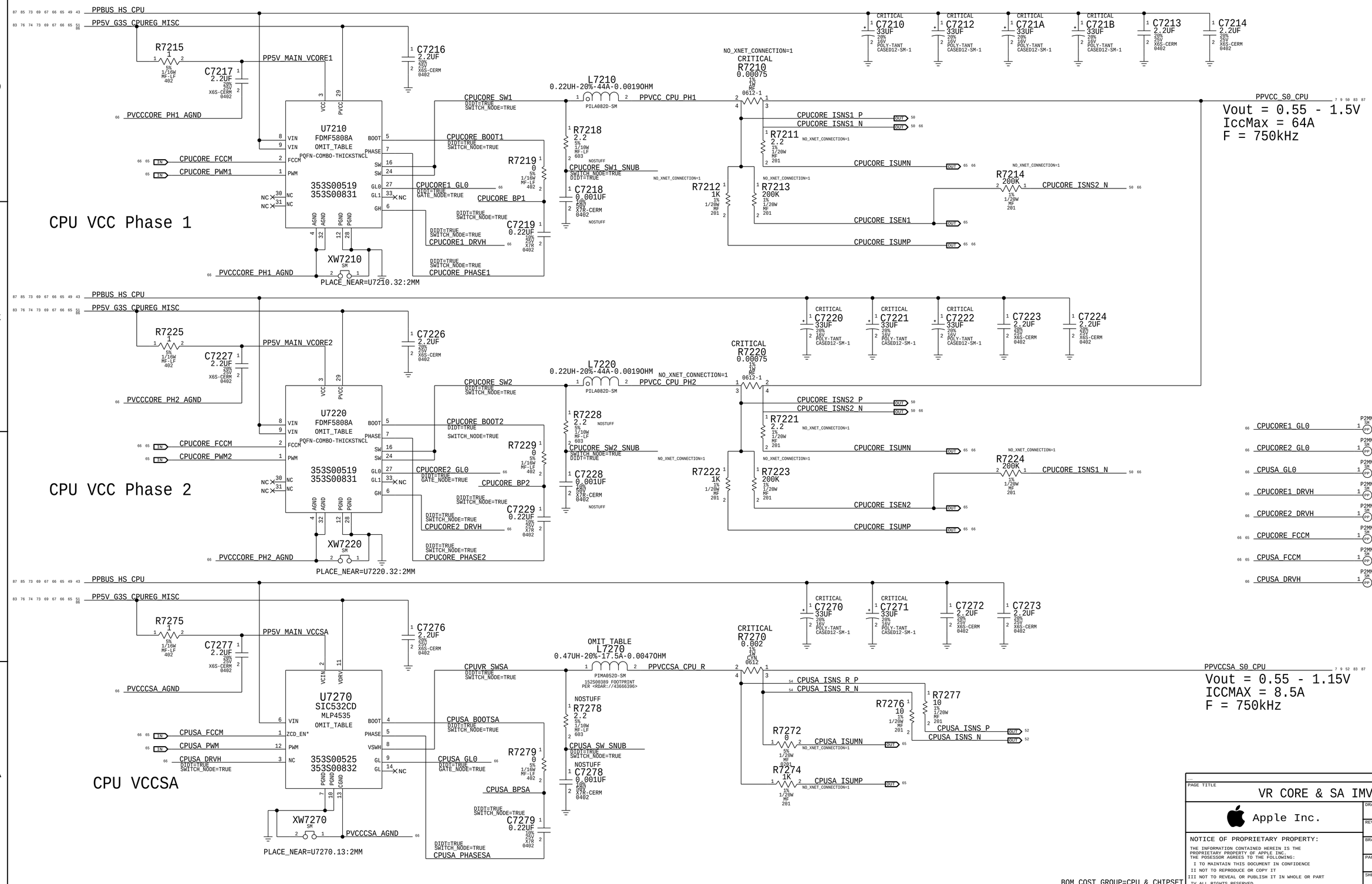

PAGE TITLE
VR CORE & SA IMVP

Apple Inc.

DRAWING NUMBER 051-05309 SIZE D
REVISION 5.1.0
BRANCH
PAGE 72 OF 500
SHEET 66 OF 98

NOTICE OF PROPRIETARY PROPERTY:
THE INFORMATION CONTAINED HEREIN IS THE PROPRIETARY PROPERTY OF APPLE INC.
THE POSESSOR AGREES TO THE FOLLOWING:
I TO MAINTAIN THIS DOCUMENT IN CONFIDENCE
II NOT TO REPRODUCE OR COPY IT
III NOT TO REVEAL OR PUBLISH IT IN WHOLE OR PART
IV ALL RIGHTS RESERVED

www.haojiyoubbs.com
QQ微信：181806465

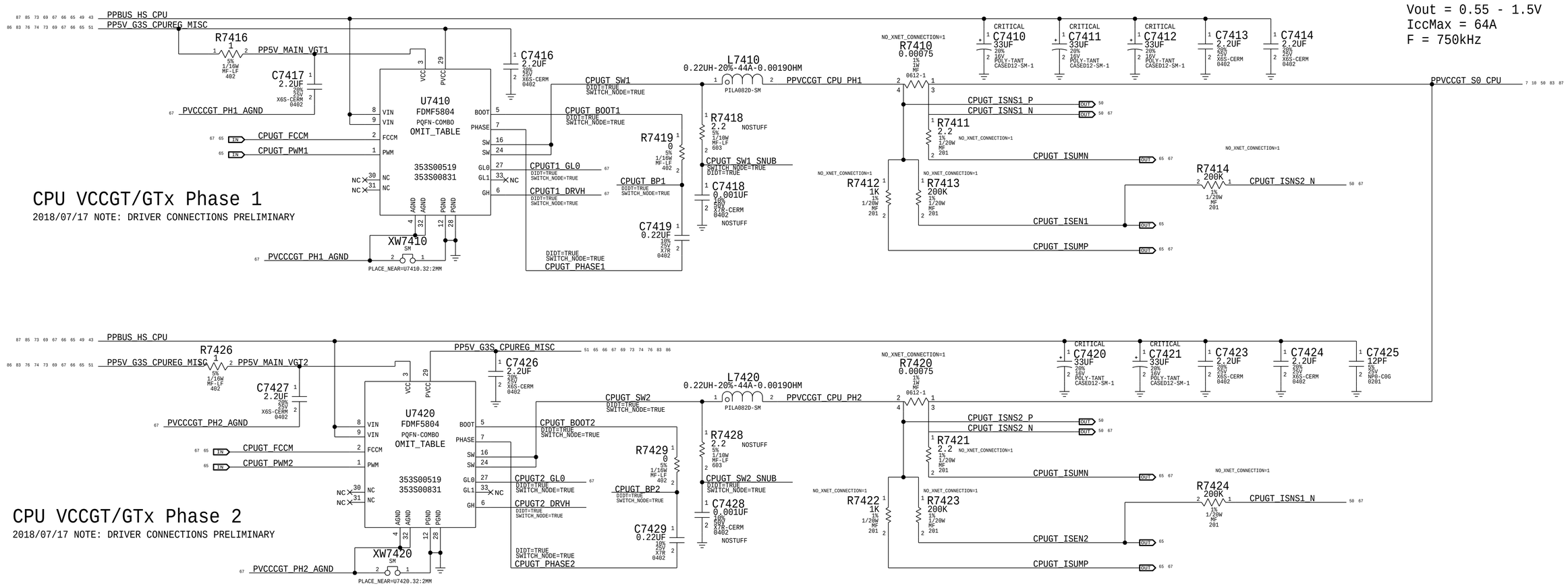

PAGE TITLE

VR GT & GTX IMVP

Apple Inc.

DRAWING NUMBER 051-05309 SIZE D

REVISION 5.1.0

BRANCH

PAGE 74 OF 500

SHEET 67 OF 98

NOTICE OF PROPRIETARY PROPERTY:

THE INFORMATION CONTAINED HEREIN IS THE PROPRIETARY PROPERTY OF APPLE INC. THE POSESSOR AGREES TO THE FOLLOWING:

I TO MAINTAIN THIS DOCUMENT IN CONFIDENCE
II NOT TO REPRODUCE OR COPY IT
III NOT TO REVEAL OR PUBLISH IT IN WHOLE OR PART
IV ALL RIGHTS RESERVED

www.haojiyoubbs.com
QQ微信：181806465

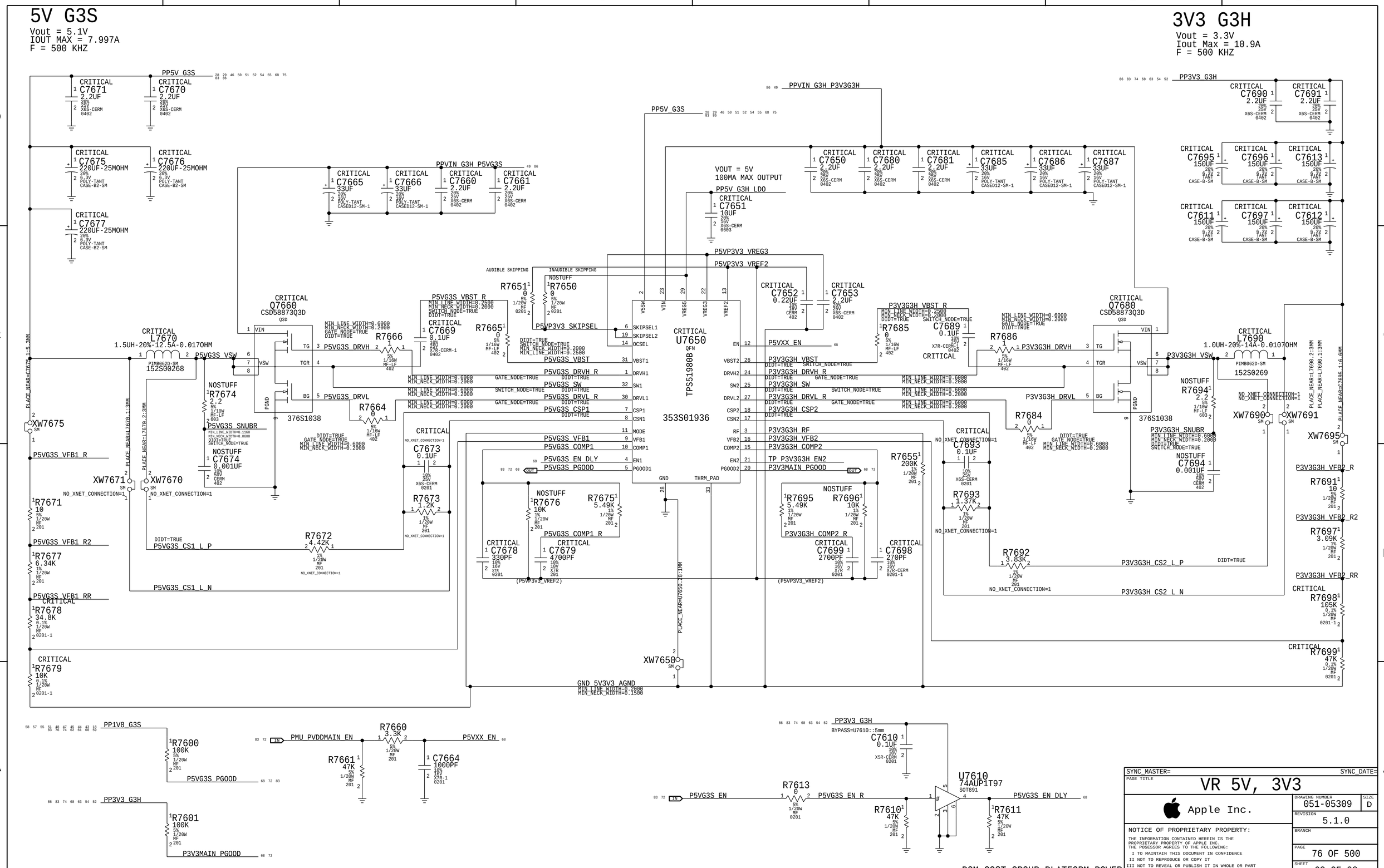

www.haojiyoubbs.com
QQ微信：181806465

1V EDRAM & EOPIO

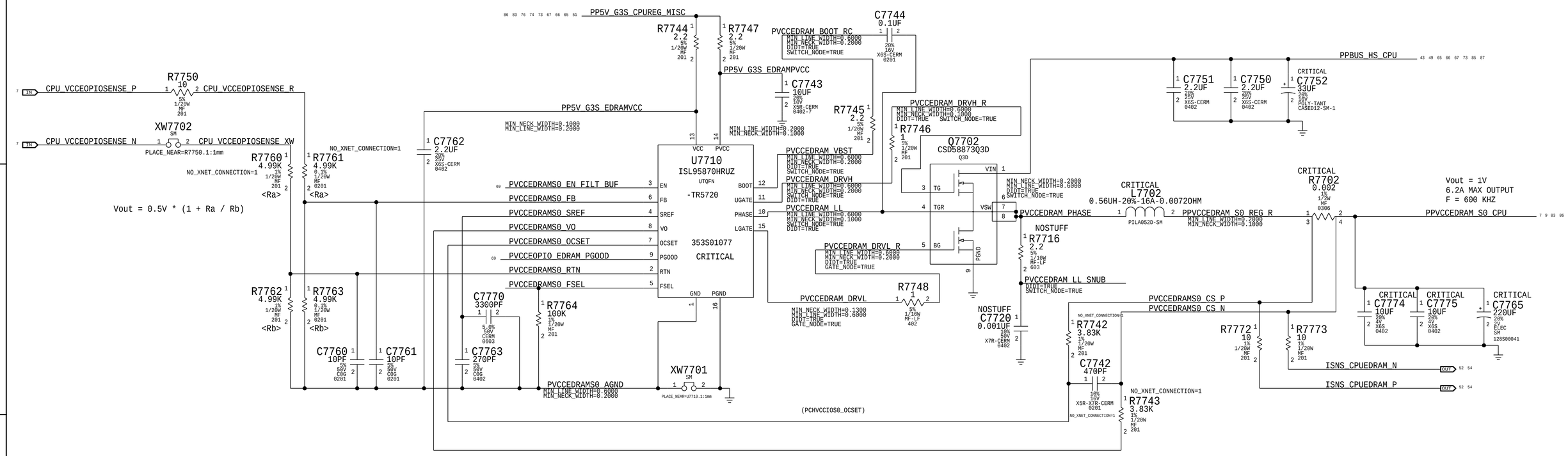

BOM_COST_GROUP=CPU & CHIPSET

PAGE TITLE	VR EOPIO EDRAM
Apple Inc.	DRAWING NUMBER 051-05309 — SIZE D
	REVISION 5.1.0
NOTICE OF PROPRIETARY PROPERTY: THE INFORMATION CONTAINED HEREIN IS THE PROPRIETARY PROPERTY OF APPLE INC. THE POSESSOR AGREES TO THE FOLLOWING: I TO MAINTAIN THIS DOCUMENT IN CONFIDENCE II NOT TO REPRODUCE OR COPY IT III NOT TO REVEAL OR PUBLISH IT IN WHOLE OR PART IV ALL RIGHTS RESERVED	BRANCH
	PAGE 77 OF 500
	SHEET 69 OF 98

www.haojiyoubbs.com
QQ微信：181806465

Note : Design based on Calpe ERS - D2449-A0-110-00_0v3.pdf (Radar# 24696002)
System Block Diagram - T290 Power System Architecture .v9
Optimize components for individual projects based on EDP(A)
Buck 0, 2, 5, 7, 8, 9 and 10 have option for Remote Sense.

CRITICAL
OMIT_TABLE

U7800
D2449A0P0FUAVAE2
WLCSP
SYM 2 OF 4

BUCK INPUT

PP3V3 G3H PMU VDDMAIN

C7801 10UF 20% 6.3V CER-X6S 0402
C7802 10UF 20% 6.3V CER-X6S 0402
C7803 10UF 20% 6.3V CER-X6S 0402
C7804 10UF 20% 6.3V CER-X6S 0402
C7805 10UF 20% 6.3V CER-X6S 0402
C7806 10UF 20% 6.3V CER-X6S 0402
C7807 10UF 20% 6.3V CER-X6S 0402
C7808 10UF 20% 6.3V CER-X6S 0402
C7809 10UF 20% 6.3V CER-X6S 0402
C7810 10UF 20% 6.3V CER-X6S 0402
C7891 10UF 20% 6.3V CER-X6S 0402
C7895 10UF 20% 6.3V CER-X6S 0402
C78A3 10UF 20% 6.3V CER-X6S 0402
C78E2 10UF 20% 6.3V CER-X6S 0402

Resistor Divider from PBUS
PMU_VDD_HI
PP1V8_SLPS2R_PMUVDDGPIO
MIN_LINE_WIDTH=0.2000
MIN_NECK_WIDTH=0.1000
VOLTAGE=1.89
C7800 0.1UF 10% 6.3V X6S 0201

C7892 1UF 20% 6.3V X6S-CERM 0201
C7893 1UF 20% 6.3V X6S-CERM 0201
C7894 1UF 20% 6.3V X6S-CERM 0201
C78A0 1UF 20% 6.3V X6S-CERM 0201
C78A1 1UF 20% 6.3V X6S-CERM 0201
C78A2 1UF 20% 6.3V X6S-CERM 0201
C78CA 1UF 20% 6.3V X6S-CERM 0201
C78A4 1UF 20% 6.3V X6S-CERM 0201
C78A5 1UF 20% 6.3V X6S-CERM 0201
PLACE_SIDE=BOTTOM

C78A6 1UF 20% 6.3V X6S-CERM 0201
C78A7 1UF 20% 6.3V X6S-CERM 0201
C78A8 1UF 20% 6.3V X6S-CERM 0201
C78A9 1UF 20% 6.3V X6S-CERM 0201
C78B0 1UF 20% 6.3V X6S-CERM 0201
C78B1 1UF 20% 6.3V X6S-CERM 0201
C78E1 1UF 20% 6.3V X6S-CERM 0201
C78E3 1UF 20% 6.3V X6S-CERM 0201
C78E4 1UF 20% 6.3V X6S-CERM 0201
PLACE_SIDE=BOTTOM

C78C2 1UF 20% 6.3V X6S-CERM 0201
C78C3 1UF 20% 6.3V X6S-CERM 0201
C78C4 1UF 20% 6.3V X6S-CERM 0201
C78C5 1UF 20% 6.3V X6S-CERM 0201
C78C6 1UF 20% 6.3V X6S-CERM 0201
C78C7 1UF 20% 6.3V X6S-CERM 0201
C78C8 1UF 20% 6.3V X6S-CERM 0201
C78C9 1UF 20% 6.3V X6S-CERM 0201
C78CB 1UF 20% 6.3V X6S-CERM 0201
C78CC 1UF 20% 6.3V X6S-CERM 0201
PLACE_SIDE=BOTTOM PLACE_SIDE=BOTTOM PLACE_SIDE=BOTTOM PLACE_SIDE=BOTTOM PLACE_SIDE=BOTTOM

VOUT = 0.7-1 V
IOUT_MAX = 4 A
F = 3MHz
PPVPCORE S5

C7860 20UF 20% 2.5V X6S-CERM 0402
C7861 20UF 20% 2.5V X6S-CERM 0402
C7862 20UF 20% 2.5V X6S-CERM 0402
C7863 20UF 20% 2.5V X6S-CERM 0402
C7864 20UF 20% 2.5V X6S-CERM 0402
C7865 20UF 20% 2.5V X6S-CERM 0402
C7889 20UF 20% 2.5V X6S-CERM 0402
C7890 20UF 20% 2.5V X6S-CERM 0402
C7866 20UF 20% 2.5V X6S-CERM 0402
C7867 20UF 20% 2.5V X6S-CERM 0402
C7868 20UF 20% 2.5V X6S-CERM 0402
C7869 20UF 20% 2.5V X6S-CERM 0402
C7870 20UF 20% 2.5V X6S-CERM 0402
C7871 20UF 20% 2.5V X6S-CERM 0402

CRITICAL
0.47UH-20%-4.8A-0.0340HM
L7819 0806-COMBO PVPCORES5_SW0
MIN_LINE_WIDTH=0.6000
MIN_NECK_WIDTH=0.1000
SWITCH_NODE=TRUE
DIDT=TRUE

CRITICAL
0.47UH-20%-4.8A-0.0340HM
L7820 0806-COMBO PVPCORES5_SW1
MIN_LINE_WIDTH=0.6000
MIN_NECK_WIDTH=0.1000
SWITCH_NODE=TRUE
DIDT=TRUE
PLACE_NEAR=L7819.1:6MM
NOSTUFF
R7819 0 5% MF 1/20W PVPCORES5_FB_P
PLACE_NEAR=U7800.G15:6MM
NOSTUFF
R7821 0 5% MF 1/20W PVPCORES5_FB_N

VOUT = 1.05 V
IOUT_MAX = 6 A
F = 3MHz
PP1V PRIM

C78D0 20UF 20% 2.5V X6S-CERM 0402
C78D1 20UF 20% 2.5V X6S-CERM 0402
C78D2 20UF 20% 2.5V X6S-CERM 0402
C78D3 20UF 20% 2.5V X6S-CERM 0402
C78D4 20UF 20% 2.5V X6S-CERM 0402
C78D5 20UF 20% 2.5V X6S-CERM 0402
C7898 20UF 20% 2.5V X6S-CERM 0402
C7872 20UF 20% 2.5V X6S-CERM 0402
C7873 20UF 20% 2.5V X6S-CERM 0402
C7874 20UF 20% 2.5V X6S-CERM 0402
C7875 20UF 20% 2.5V X6S-CERM 0402
C7876 20UF 20% 2.5V X6S-CERM 0402
C7899 20UF 20% 2.5V X6S-CERM 0402
C7877 20UF 20% 2.5V X6S-CERM 0402
C7878 20UF 20% 2.5V X6S-CERM 0402
C7879 20UF 20% 2.5V X6S-CERM 0402
C7880 20UF 20% 2.5V X6S-CERM 0402
C7881 20UF 20% 2.5V X6S-CERM 0402

CRITICAL
0.47UH-20%-4.8A-0.0340HM
L7821 0806-COMBO P1VPRIM_SW0
MIN_LINE_WIDTH=0.6000
MIN_NECK_WIDTH=0.1000
SWITCH_NODE=TRUE
DIDT=TRUE

CRITICAL
0.47UH-20%-4.8A-0.0340HM
L7822 0806-COMBO P1VPRIM_SW1
MIN_LINE_WIDTH=0.6000
MIN_NECK_WIDTH=0.1000
SWITCH_NODE=TRUE
DIDT=TRUE
PLACE_NEAR=L7822.1:5MM
NOSTUFF
R7820 0 5% MF 1/20W P1VPRIM_FB

VOUT = 0.9 V
IOUT_MAX = 3 A
F = 3MHz
PP0V9 SSD0

R7823 should be stuffed when Buck9 is unused

C7882 20UF 20% 2.5V X6S-CERM 0402 SSD:2L
C7883 20UF 20% 2.5V X6S-CERM 0402 SSD:2L
C7884 20UF 20% 2.5V X6S-CERM 0402 SSD:2L
C7885 20UF 20% 2.5V X6S-CERM 0402 SSD:2L
C7886 20UF 20% 2.5V X6S-CERM 0402 SSD:2L
C7887 20UF 20% 2.5V X6S-CERM 0402 SSD:2L

CRITICAL
0.47UH-20%-4.8A-0.0340HM
L7823 0806-COMBO P0V9SSD_SW0
MIN_LINE_WIDTH=0.6000
MIN_NECK_WIDTH=0.1000
DIDT=TRUE
SWITCH_NODE=TRUE
PLACE_NEAR=L7823.1:10MM
R7822 0 5% MF 1/20W P0V9SSD_FB_P NO_TEST=1
PLACE_NEAR=U7800.N14:10MM
R7823 0 5% MF 1/20W P0V9SSD_FB_N NO_TEST=1

VOUT = 1.2/1.8 V
IOUT_MAX = 3 A
F = 3MHz
PPVCCQ_ANI SSD0

C78B2 20UF 20% 2.5V X6S-CERM 0402 SSD:2L
C78B3 20UF 20% 2.5V X6S-CERM 0402 SSD:2L
C78B4 20UF 20% 2.5V X6S-CERM 0402 SSD:2L
C78B5 20UF 20% 2.5V X6S-CERM 0402 SSD:2L
C78B6 20UF 20% 2.5V X6S-CERM 0402 SSD:2L
C78B7 20UF 20% 2.5V X6S-CERM 0402 SSD:2L
C78B8 20UF 20% 2.5V X6S-CERM 0402 SSD:2L
C78B9 20UF 20% 2.5V X6S-CERM 0402 SSD:2L
C78C0 20UF 20% 2.5V X6S-CERM 0402 SSD:2L
C78C1 20UF 20% 2.5V X6S-CERM 0402 SSD:2L

CRITICAL
0.47UH-20%-4.8A-0.0340HM
L7824 0806-COMBO PVCCQSSD_SW0
MIN_LINE_WIDTH=0.6000
MIN_NECK_WIDTH=0.1000
DIDT=TRUE
SWITCH_NODE=TRUE
PLACE_NEAR=L7824.1:5MM
R7824 0 5% MF 1/20W PVCCQSSD_FB

CRITICAL
1UH-20%-3.8A-0.0550HM
L7806 2016-COMBO PVDDCPUAWAKE_SW0
SWITCH_NODE=TRUE
MIN_NECK_WIDTH=0.2000
MIN_LINE_WIDTH=0.1750
DIDT=TRUE

CRITICAL
0.22UH-20%-6.7A-0.0230HM
L7807 PINA20121T-SM PVDDCPUAWAKE_SW1
SWITCH_NODE=TRUE
MIN_NECK_WIDTH=0.2000
MIN_LINE_WIDTH=0.1750
DIDT=TRUE

CRITICAL
0.22UH-20%-6.7A-0.0230HM
L7808 PINA20121T-SM PVDDCPUAWAKE_SW2
SWITCH_NODE=TRUE
MIN_NECK_WIDTH=0.2000
MIN_LINE_WIDTH=0.1750
DIDT=TRUE

CRITICAL
0.22UH-20%-6.7A-0.0230HM
L7809 PINA20121T-SM PVDDCPUAWAKE_SW3
SWITCH_NODE=TRUE
MIN_NECK_WIDTH=0.2000
MIN_LINE_WIDTH=0.1750
DIDT=TRUE
PLACE_NEAR=L7806.2:5MM
R7806 0 5% MF 1/20W PVDDCPUAWAKE_FB

CRITICAL
1.0UH-20%-2.6A-0.0950HM
L7810 0805-COMBO PVDDCPUSRAMAWAKE_SW0
SWITCH_NODE=TRUE
MIN_NECK_WIDTH=0.2000
MIN_LINE_WIDTH=0.1750
DIDT=TRUE
PLACE_NEAR=L7810.2:5MM
R7811 0 5% MF 1/20W PVDDCPUSRAMAWAKE_FB

CRITICAL
1UH-20%-4.7A-0.040HM
L7811 2520 P0V8SLPDDR_SW0
SWITCH_NODE=TRUE
MIN_NECK_WIDTH=0.2000
MIN_LINE_WIDTH=0.1750
DIDT=TRUE

CRITICAL
0.47UH-20%-4.8A-0.0340HM
L7812 0806-COMBO P0V8SLPDDR_SW1
SWITCH_NODE=TRUE
MIN_NECK_WIDTH=0.2000
MIN_LINE_WIDTH=0.1750
DIDT=TRUE
PLACE_NEAR=L7812.2:5MM
NOSTUFF
R7812 0 5% MF 1/20W P0V8SLPDDR_FB

CRITICAL
1UH-20%-3.8A-0.0550HM
L7813 2016-COMBO P1V8SLPS2R_SW0
SWITCH_NODE=TRUE
MIN_NECK_WIDTH=0.2000
MIN_LINE_WIDTH=0.1750
DIDT=TRUE
PLACE_NEAR=L7813.2:5MM
R7813 0 5% MF 1/20W P1V8SLPS2R_FB

CRITICAL
1UH-20%-3.8A-0.0550HM
L7814 2016-COMBO P1V1SLPS2R_SW0
SWITCH_NODE=TRUE
MIN_NECK_WIDTH=0.2000
MIN_LINE_WIDTH=0.1750
DIDT=TRUE

CRITICAL
0.47UH-20%-4.8A-0.0340HM
L7815 0806-COMBO P1V1SLPS2R_SW1
SWITCH_NODE=TRUE
MIN_NECK_WIDTH=0.2000
MIN_LINE_WIDTH=0.1750
DIDT=TRUE
PLACE_NEAR=L7815.2:5MM
R7814 0 5% MF 1/20W P1V1SLPS2R_FB

CRITICAL
1UH-20%-3.8A-0.0550HM
L7816 2016-COMBO P0V9SLPDDR_SW0
SWITCH_NODE=TRUE
MIN_NECK_WIDTH=0.2000
MIN_LINE_WIDTH=0.1750
DIDT=TRUE

CRITICAL
0.47UH-20%-4.8A-0.0340HM
L7817 0806-COMBO P0V9SLPDDR_SW1
SWITCH_NODE=TRUE
MIN_NECK_WIDTH=0.2000
MIN_LINE_WIDTH=0.1750
DIDT=TRUE
PLACE_NEAR=L7816.2:5MM
R7816 0 5% MF 1/20W P0V9SLPDDR_FB
NOSTUFF

Vout = 0.625V - 1.06V
Iout_Max = 13.4A
F = 2MHz & 4MHz
PPVDDCPU_AWAKE

C7811 20UF 20% 2.5V X6S-CERM 0402
C7812 20UF 20% 2.5V X6S-CERM 0402
C7813 20UF 20% 2.5V X6S-CERM 0402
C7821 20UF 20% 2.5V X6S-CERM 0402
C7822 20UF 20% 2.5V X6S-CERM 0402
C7823 20UF 20% 2.5V X6S-CERM 0402
C7824 20UF 20% 2.5V X6S-CERM 0402
C7825 20UF 20% 2.5V X6S-CERM 0402
C7826 20UF 20% 2.5V X6S-CERM 0402
C7827 20UF 20% 2.5V X6S-CERM 0402
C7828 20UF 20% 2.5V X6S-CERM 0402

Vout = 0.8V - 1.06V
Iout_Max = 1A
F = 3MHz
PPVDDCPUSRAM_AWAKE

C7829 10UF 20% 4V X6S 0402-1
C7830 10UF 20% 4V X6S 0402-1

Vout = 0.82V
Iout_Max = 6A
F = 3MHz
PP0V82_SLPDDR

C7833 20UF 20% 2.5V X6S-CERM 0402
C7834 20UF 20% 2.5V X6S-CERM 0402
C7835 20UF 20% 2.5V X6S-CERM 0402
C7836 20UF 20% 2.5V X6S-CERM 0402
C7837 20UF 20% 2.5V X6S-CERM 0402
C7838 20UF 20% 2.5V X6S-CERM 0402
C7814 20UF 20% 2.5V X6S-CERM 0402
C7815 20UF 20% 2.5V X6S-CERM 0402
C7831 20UF 20% 2.5V X6S-CERM 0402
C7832 20UF 20% 2.5V X6S-CERM 0402

Vout = 1.8V
Iout_Max = 2.5A
F = 3MHz
PP1V8_SLPS2R

C7839 20UF 20% 2.5V X6S-CERM 0402
C7840 20UF 20% 2.5V X6S-CERM 0402
C7841 20UF 20% 2.5V X6S-CERM 0402
C7842 20UF 20% 2.5V X6S-CERM 0402
C7843 20UF 20% 2.5V X6S-CERM 0402
C7844 20UF 20% 2.5V X6S-CERM 0402
C7845 20UF 20% 2.5V X6S-CERM 0402

Vout = 1.1V
Iout_Max = 4A
F = 3MHz
PP1V1_SLPS2R

C7846 20UF 20% 2.5V X6S-CERM 0402
C7847 20UF 20% 2.5V X6S-CERM 0402
C7848 20UF 20% 2.5V X6S-CERM 0402
C7849 20UF 20% 2.5V X6S-CERM 0402
C7850 20UF 20% 2.5V X6S-CERM 0402
C7851 20UF 20% 2.5V X6S-CERM 0402
C7816 20UF 20% 2.5V X6S-CERM 0402
C7817 20UF 20% 2.5V X6S-CERM 0402

Vout = 0.9V
Iout_Max = 4A
F = 3MHz
PP0V9_SLPDDR

C7852 20UF 20% 2.5V X6S-CERM 0402
C7853 20UF 20% 2.5V X6S-CERM 0402
C7854 20UF 20% 2.5V X6S-CERM 0402
C7855 20UF 20% 2.5V X6S-CERM 0402
C7856 20UF 20% 2.5V X6S-CERM 0402
C7818 20UF 20% 2.5V X6S-CERM 0402
C7819 20UF 20% 2.5V X6S-CERM 0402

SWITCH OUTPUTS

		Supplied Current
BUCK3_SW1	PP1V8_AWAKE	0.3A
BUCK3_SW2	PP1V8_SLPS2R_PMUVDDGPIO	0.3A
BUCK3_SW3_0 / BUCK3_SW3_1	PP1V8_S5	1.0A
BUCK3_SW4_0 / BUCK3_SW4_1	PP1V8_S3	1.0A
BUCK3_SW5	PP1V8_IO_SSD0_R	0.5A
BUCK4_SW1	NC	0.5A
BUCK6_SW1	NC	0.3A
BUCK8_SW1	NC PPBUCK8_SW1	0.3A
BUCK8_SW2	PP1V_S3	0.3A

BOM_COST_GROUP=PLATFORM POWER

PAGE TITLE
PMIC BUCKS AND SWS

Apple Inc.

DRAWING NUMBER 051-05309
SIZE D
REVISION 5.1.0
BRANCH
PAGE 78 OF 500
SHEET 70 OF 98

NOTICE OF PROPRIETARY PROPERTY:
THE INFORMATION CONTAINED HEREIN IS THE PROPRIETARY PROPERTY OF APPLE INC.
THE POSESSOR AGREES TO THE FOLLOWING:
I TO MAINTAIN THIS DOCUMENT IN CONFIDENCE
II NOT TO REPRODUCE OR COPY IT
III NOT TO REVEAL OR PUBLISH IT IN WHOLE OR PART
IV ALL RIGHTS RESERVED

www.haojiyoubbs.com
QQ微信：181806465

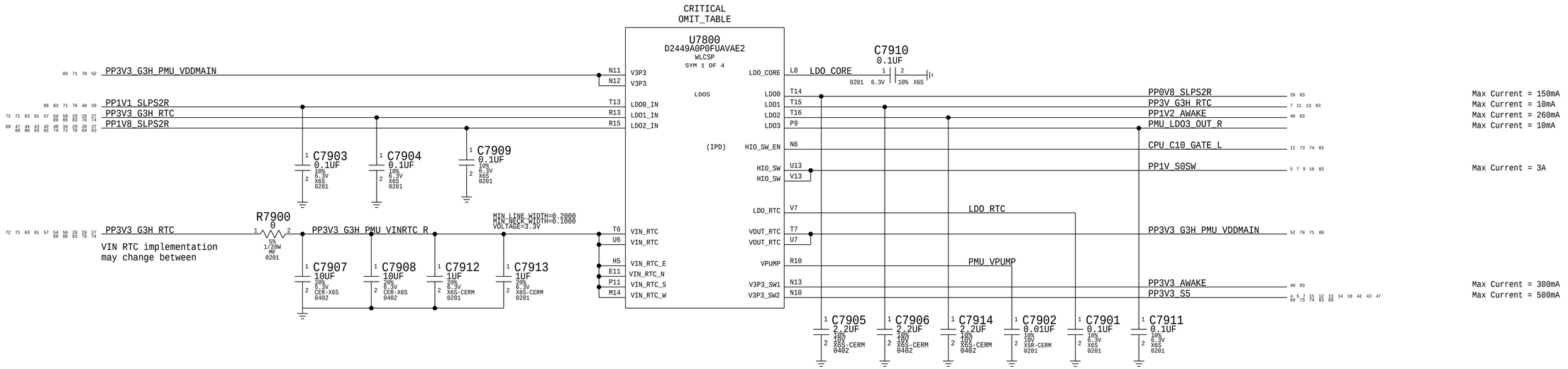

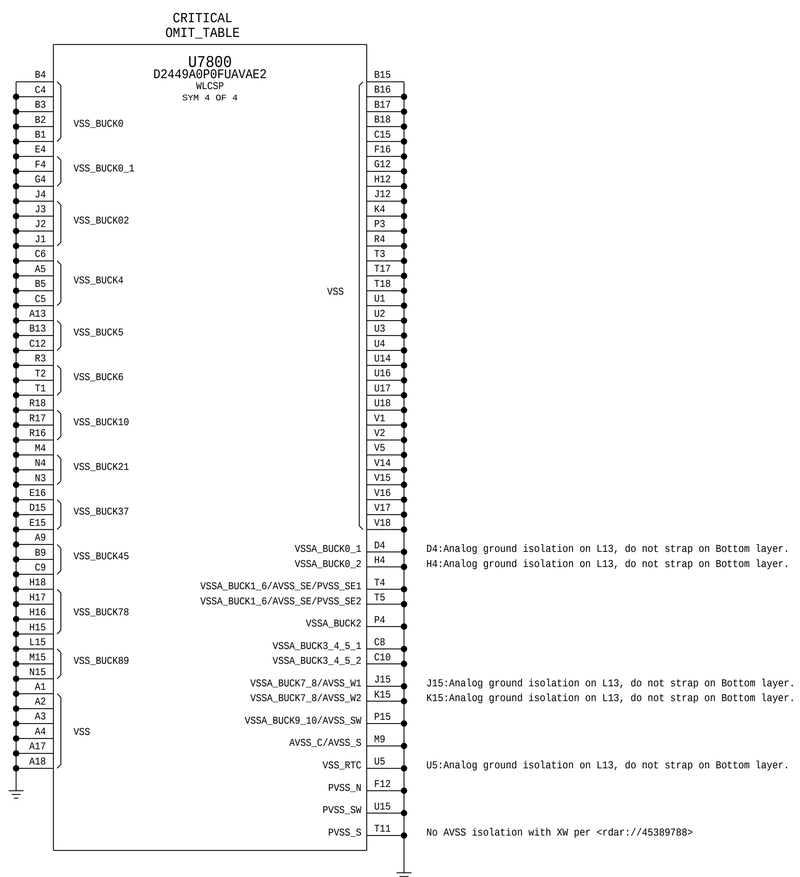

1.1V SLPDDR SWITCH

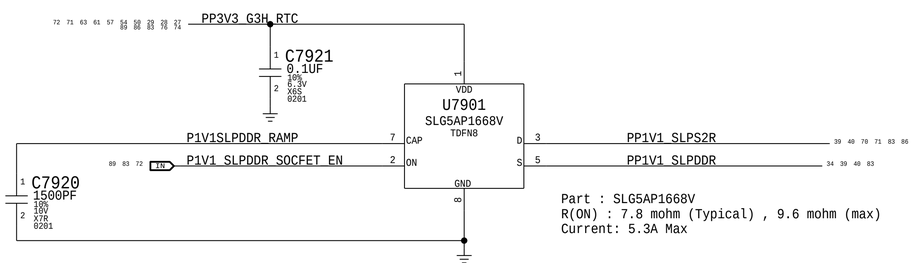

BOM_COST_GROUP=PLATFORM POWER

PAGE TITLE
PMIC LDOS

Apple Inc.

DRAWING NUMBER 051-05309 | SIZE D
REVISION 5.1.0
BRANCH
PAGE 79 OF 500
SHEET 71 OF 98

NOTICE OF PROPRIETARY PROPERTY:
THE INFORMATION CONTAINED HEREIN IS THE PROPRIETARY PROPERTY OF APPLE INC.
THE POSESSOR AGREES TO THE FOLLOWING:
I TO MAINTAIN THIS DOCUMENT IN CONFIDENCE
II NOT TO REPRODUCE OR COPY IT
III NOT TO REVEAL OR PUBLISH IT IN WHOLE OR PART
IV ALL RIGHTS RESERVED

www.haojiyoubbs.com
QQ微信：181806465

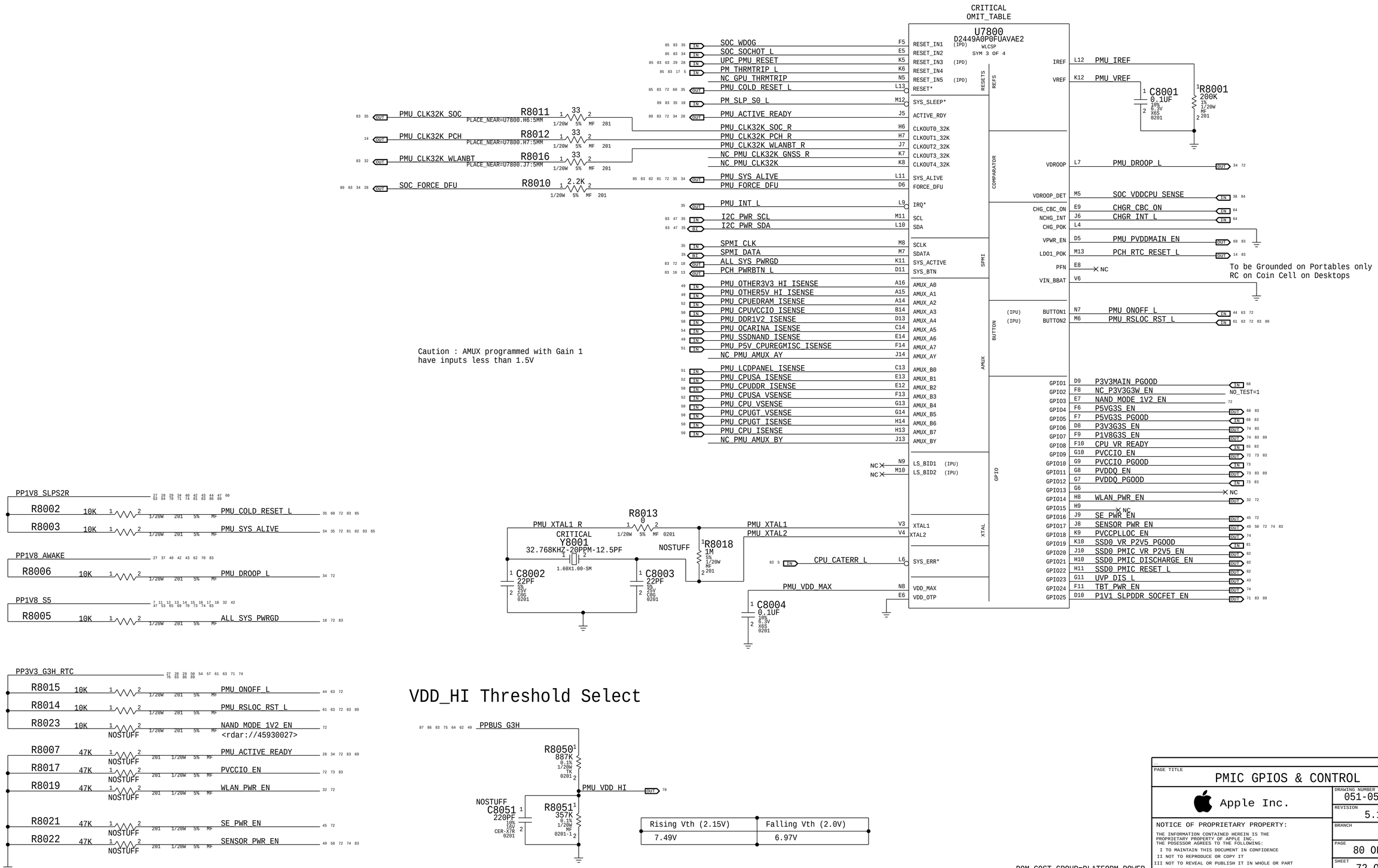

www.haojiyoubbs.com
QQ微信：181806465

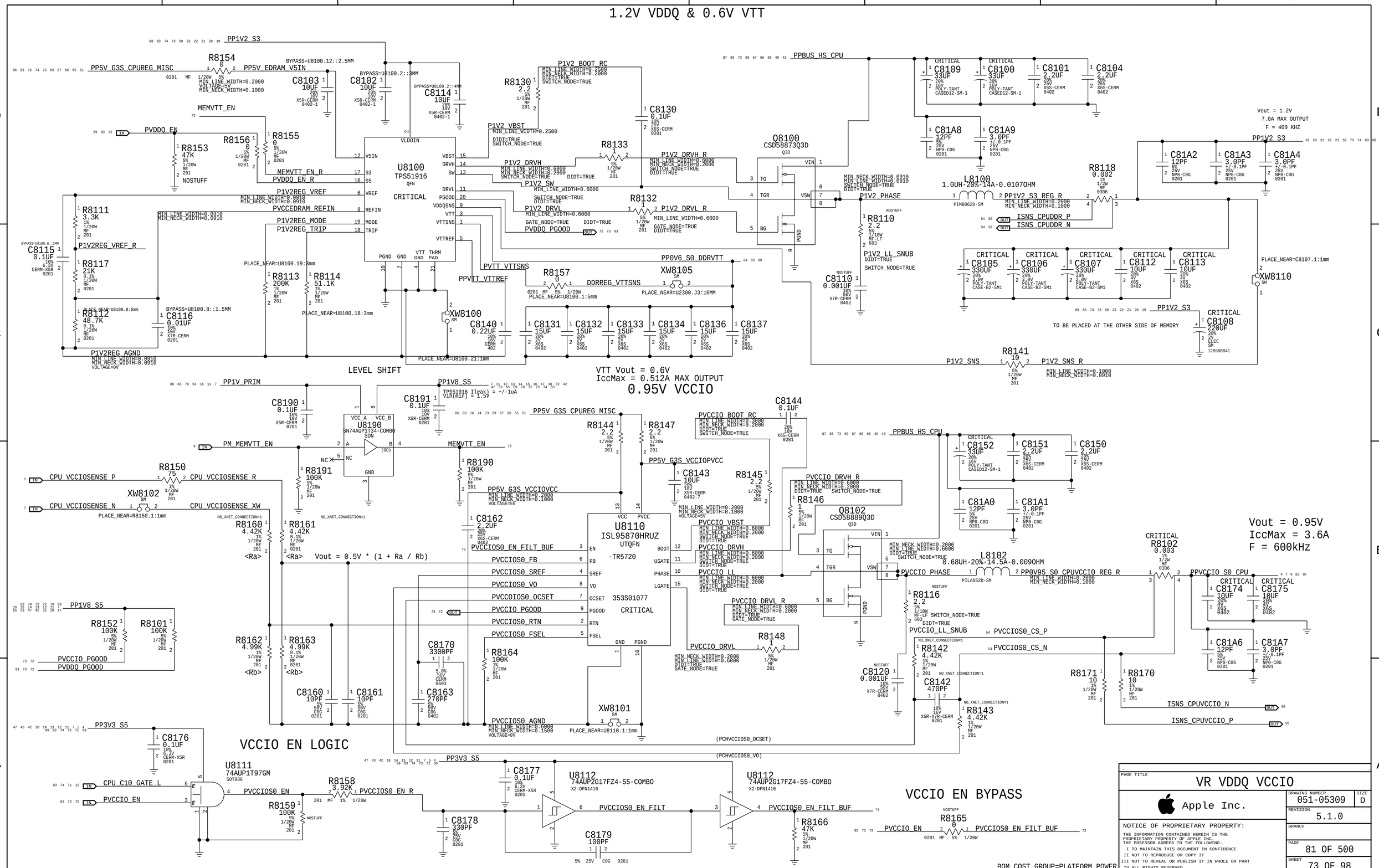

www.haojiyoubbs.com
QQ微信：181806465

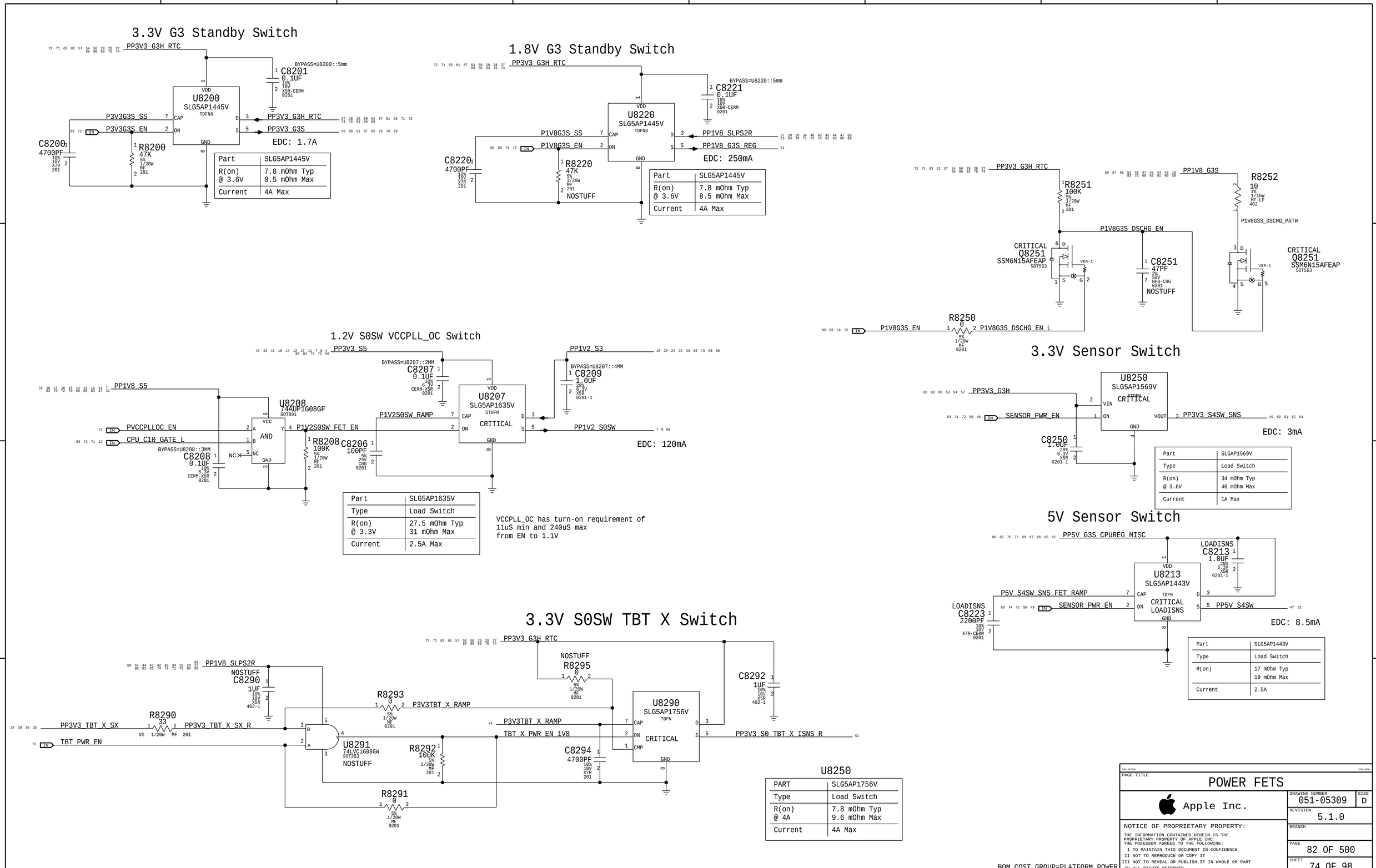

www.haojiyoubbs.com
QQ微信：181806465

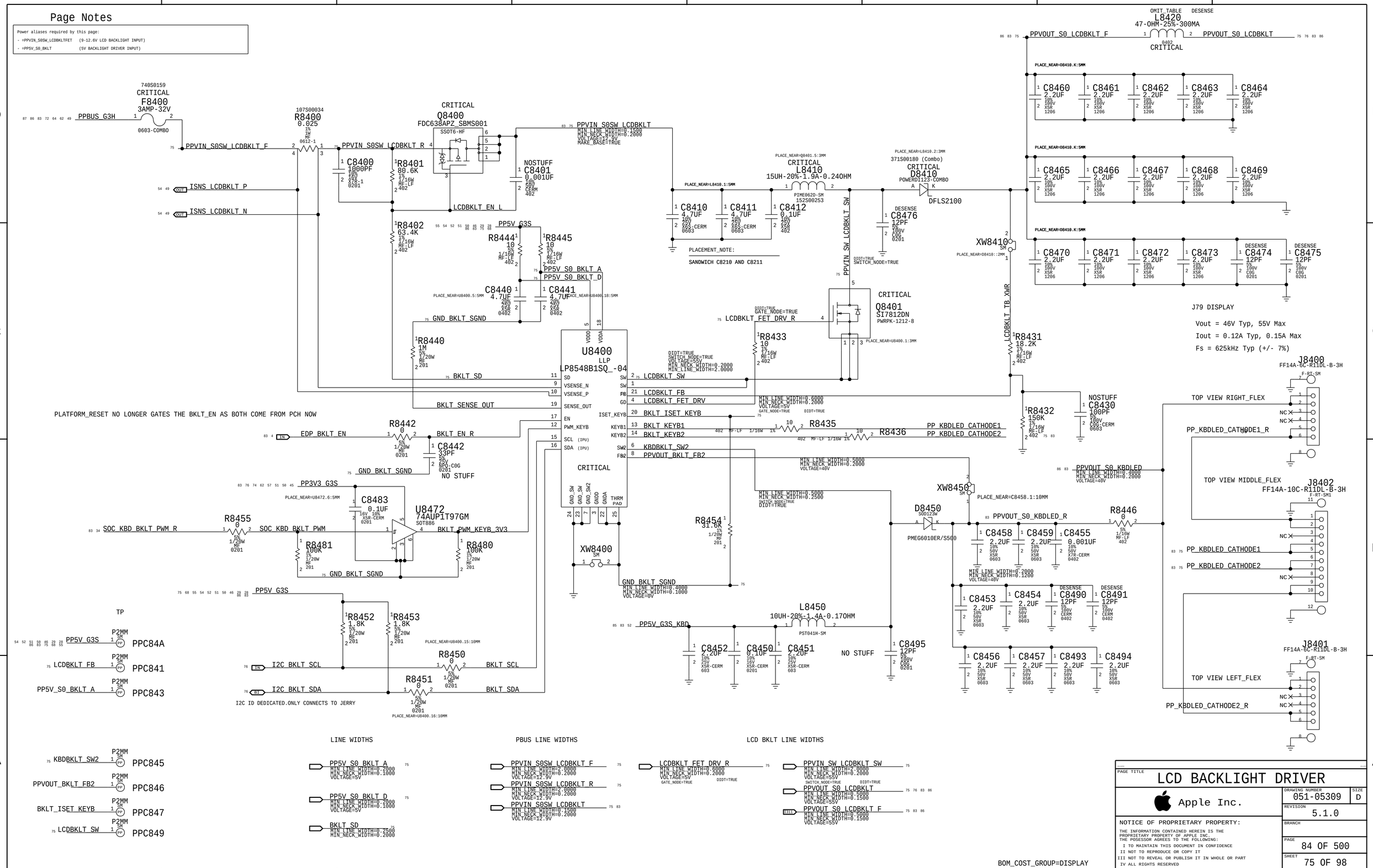

www.haojiyoubbs.com
QQ微信：181806465

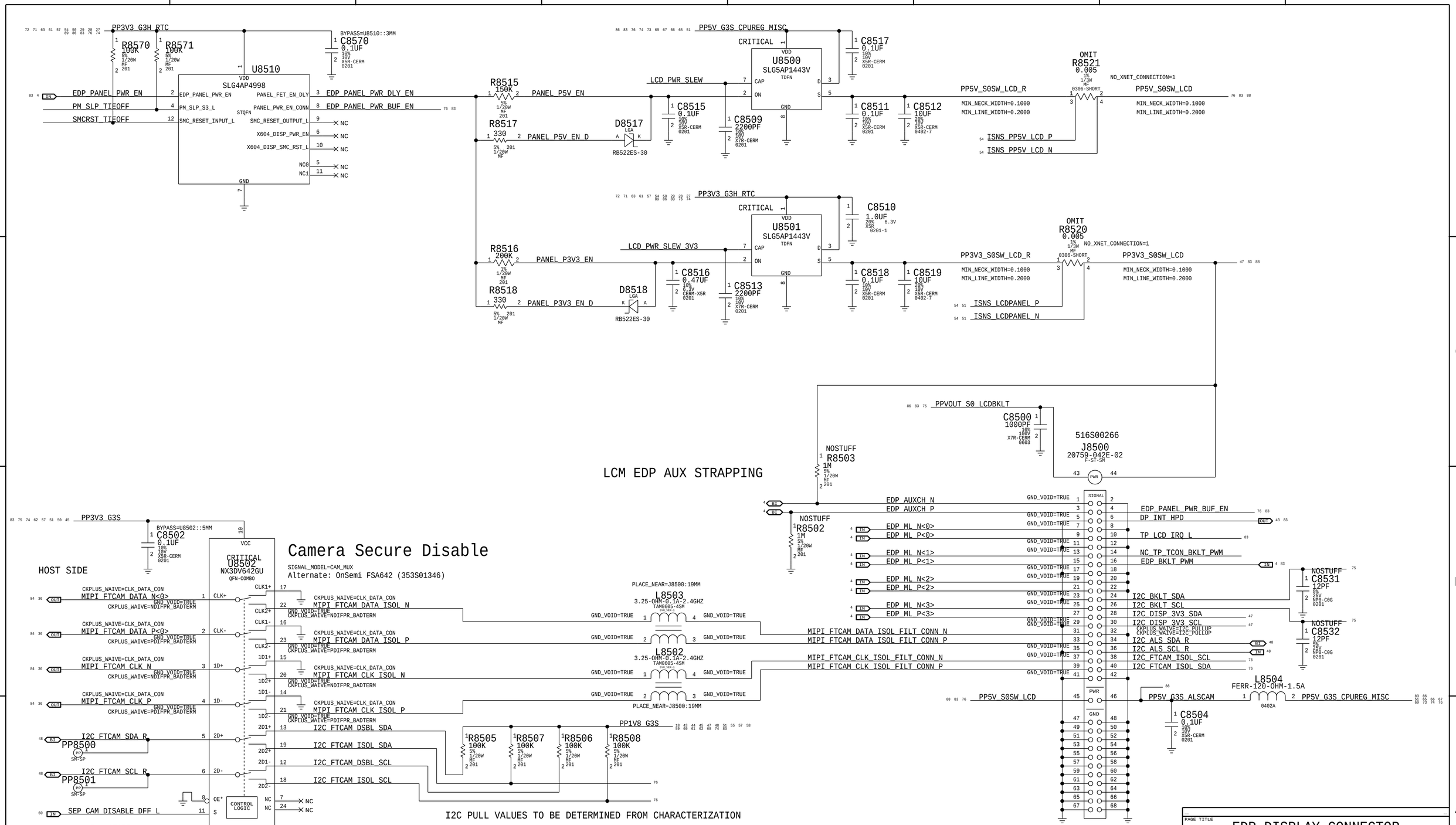

www.haojiyoubbs.com
QQ微信：181806465

S4E0

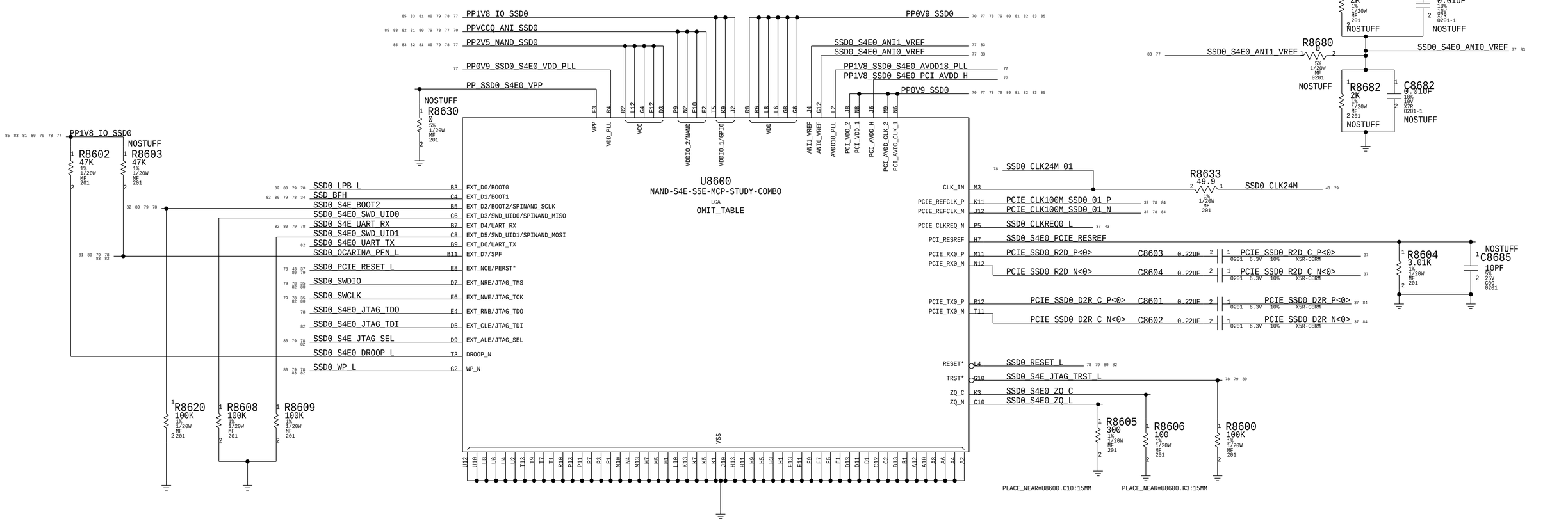

PAGE TITLE	S4E<0>
	Apple Inc.
DRAWING NUMBER	051-05309
SIZE	D
REVISION	5.1.0
BRANCH	
PAGE	86 OF 500
SHEET	77 OF 98

NOTICE OF PROPRIETARY PROPERTY:
THE INFORMATION CONTAINED HEREIN IS THE PROPRIETARY PROPERTY OF APPLE INC.
THE POSESSOR AGREES TO THE FOLLOWING:
I TO MAINTAIN THIS DOCUMENT IN CONFIDENCE
II NOT TO REPRODUCE OR COPY IT
III NOT TO REVEAL OR PUBLISH IT IN WHOLE OR PART
IV ALL RIGHTS RESERVED

www.haojiyoubbs.com
QQ微信：181806465

S4E1

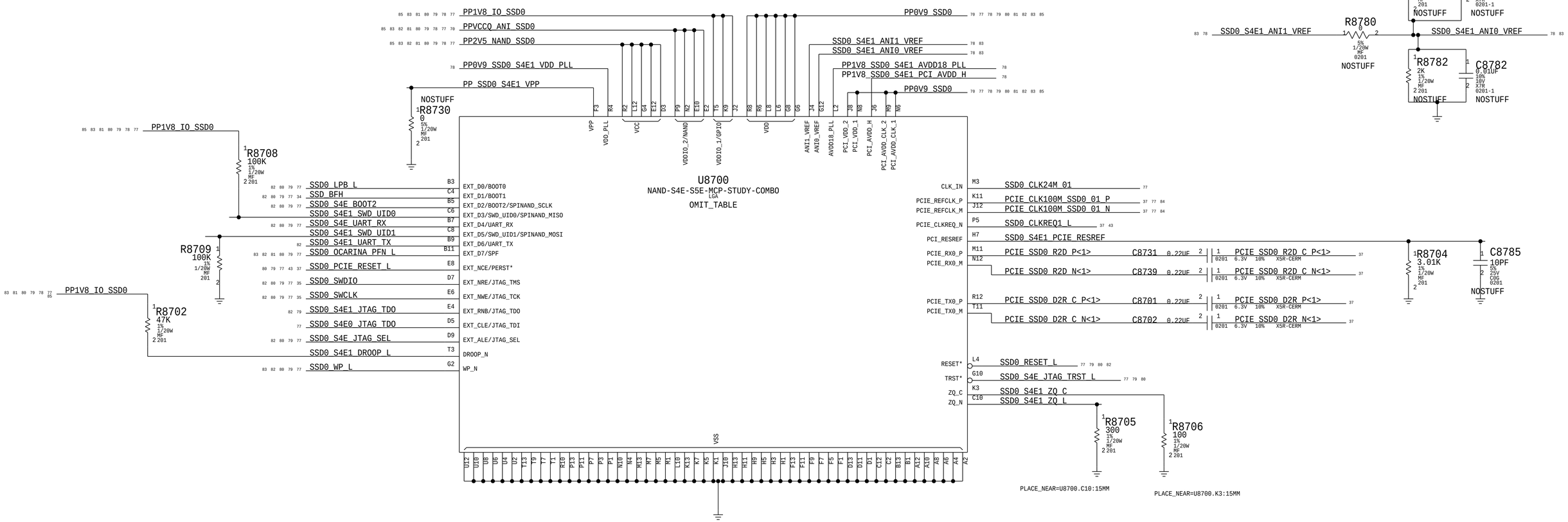

EXTERNAL VREF

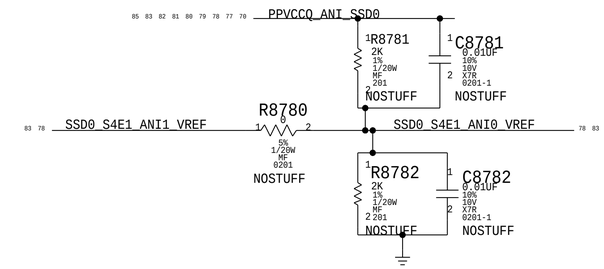

S4E VDD

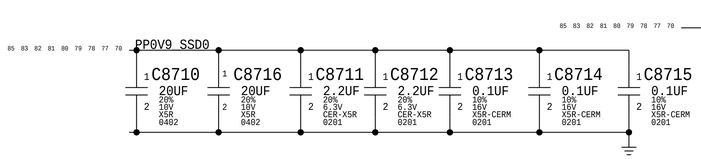

S4E VDDIO_2

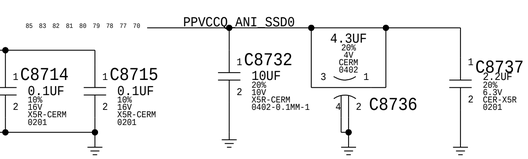

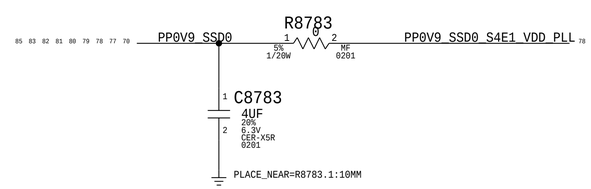

VCC CAP

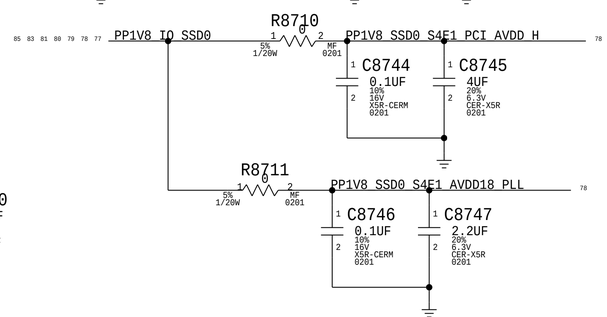

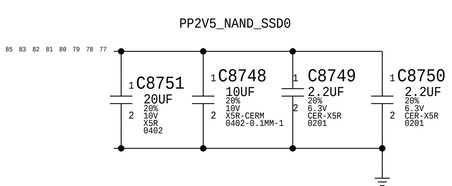

S4E VDDIO_1

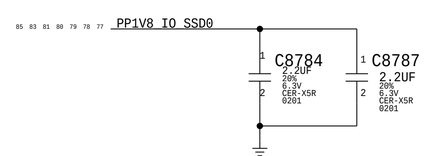

BOM_COST_GROUP=SSD

PAGE TITLE	S4E<1>
Apple Inc.	DRAWING NUMBER 051-05309 SIZE D
	REVISION 5.1.0
	BRANCH
	PAGE 87 OF 500
	SHEET 78 OF 98

NOTICE OF PROPRIETARY PROPERTY:
THE INFORMATION CONTAINED HEREIN IS THE PROPRIETARY PROPERTY OF APPLE INC.
THE POSESSOR AGREES TO THE FOLLOWING:
I TO MAINTAIN THIS DOCUMENT IN CONFIDENCE
II NOT TO REPRODUCE OR COPY IT
III NOT TO REVEAL OR PUBLISH IT IN WHOLE OR PART
IV ALL RIGHTS RESERVED

www.haojiyoubbs.com
QQ微信：181806465

S4E2

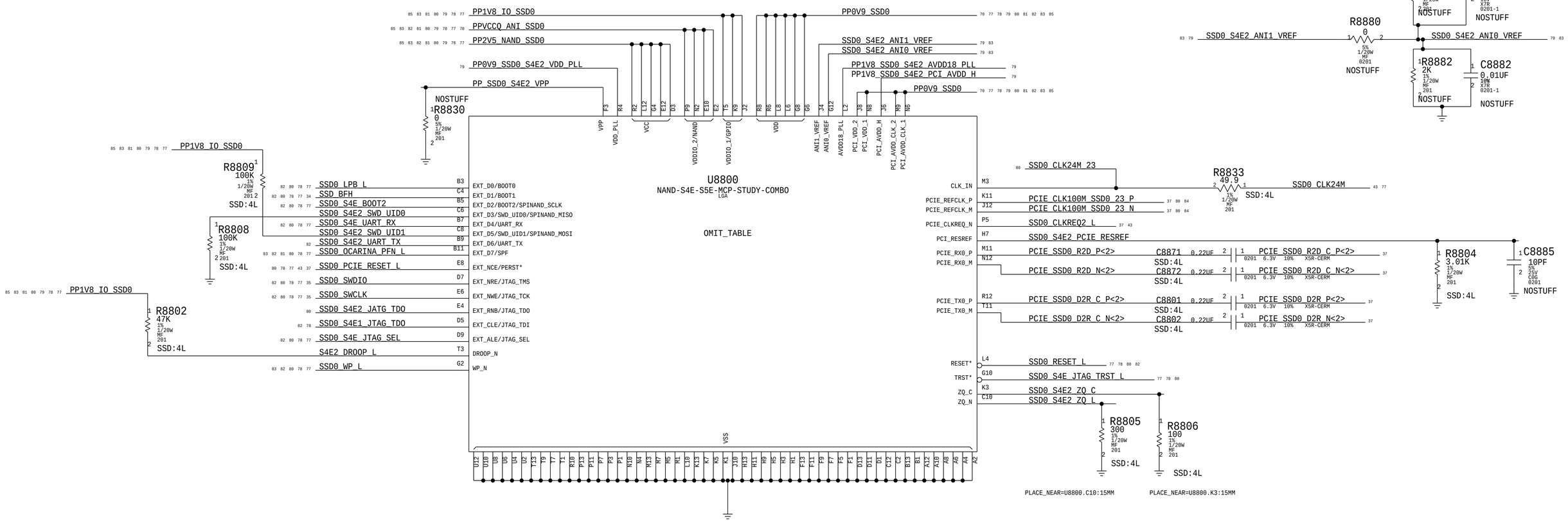

EXTERNAL VREF

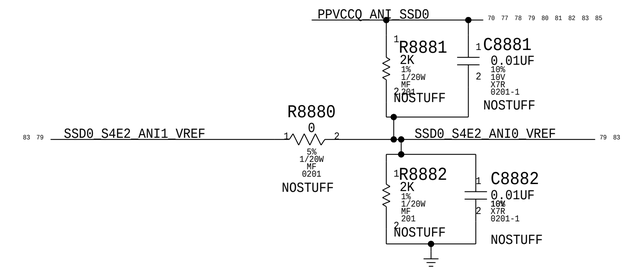

S4E VDD

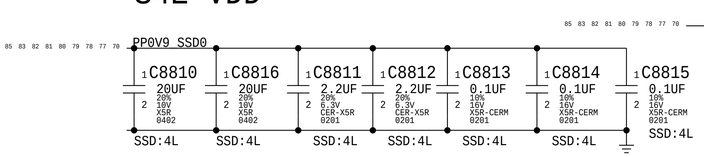

S4E VDDIO_2

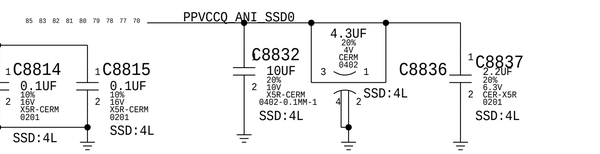

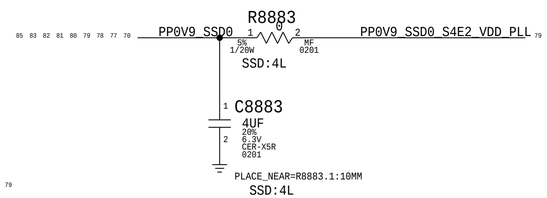

VCC CAP

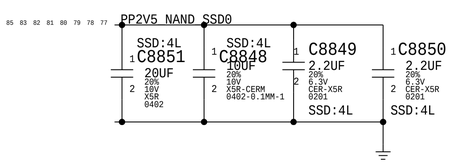

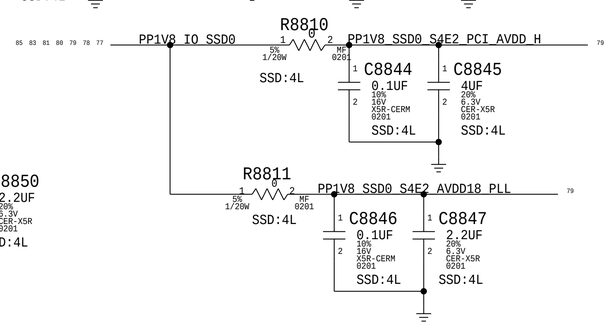

S4E VDDIO_1

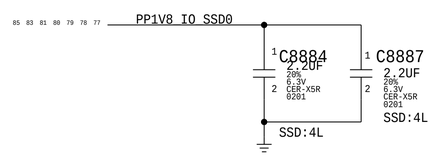

BOM_COST_GROUP=SSD

PAGE TITLE	S4E<2>
Apple Inc.	DRAWING NUMBER 051-05309 SIZE D
	REVISION 5.1.0
	BRANCH
	PAGE 88 OF 500
	SHEET 79 OF 98

NOTICE OF PROPRIETARY PROPERTY:
THE INFORMATION CONTAINED HEREIN IS THE PROPRIETARY PROPERTY OF APPLE INC.
THE POSESSOR AGREES TO THE FOLLOWING:
I TO MAINTAIN THIS DOCUMENT IN CONFIDENCE
II NOT TO REPRODUCE OR COPY IT
III NOT TO REVEAL OR PUBLISH IT IN WHOLE OR PART
IV ALL RIGHTS RESERVED

www.haojiyoubbs.com
QQ微信：181806465

S4E3

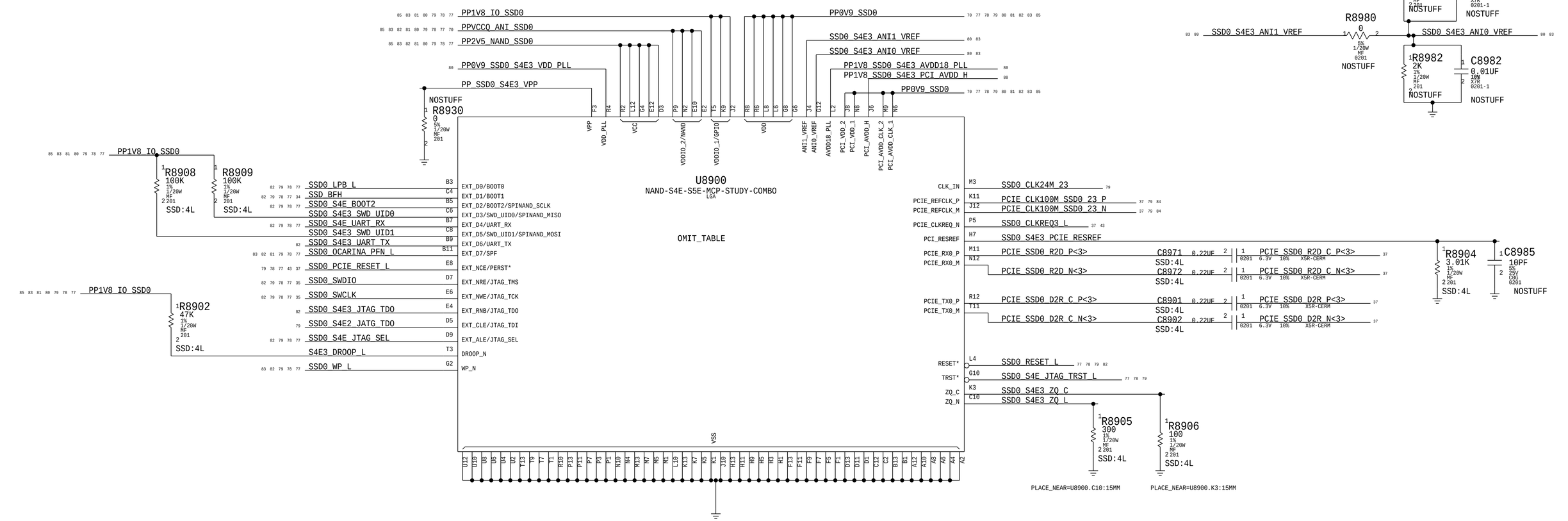

BOM_COST_GROUP=SSD

PAGE TITLE	S4E<3>
Apple Inc.	DRAWING NUMBER 051-05309 SIZE D
	REVISION 5.1.0
NOTICE OF PROPRIETARY PROPERTY: THE INFORMATION CONTAINED HEREIN IS THE PROPRIETARY PROPERTY OF APPLE INC. THE POSESSOR AGREES TO THE FOLLOWING: I TO MAINTAIN THIS DOCUMENT IN CONFIDENCE II NOT TO REPRODUCE OR COPY IT III NOT TO REVEAL OR PUBLISH IT IN WHOLE OR PART IV ALL RIGHTS RESERVED	BRANCH
	PAGE 89 OF 500
	SHEET 80 OF 98

www.haojiyoubbs.com
QQ微信：181806465

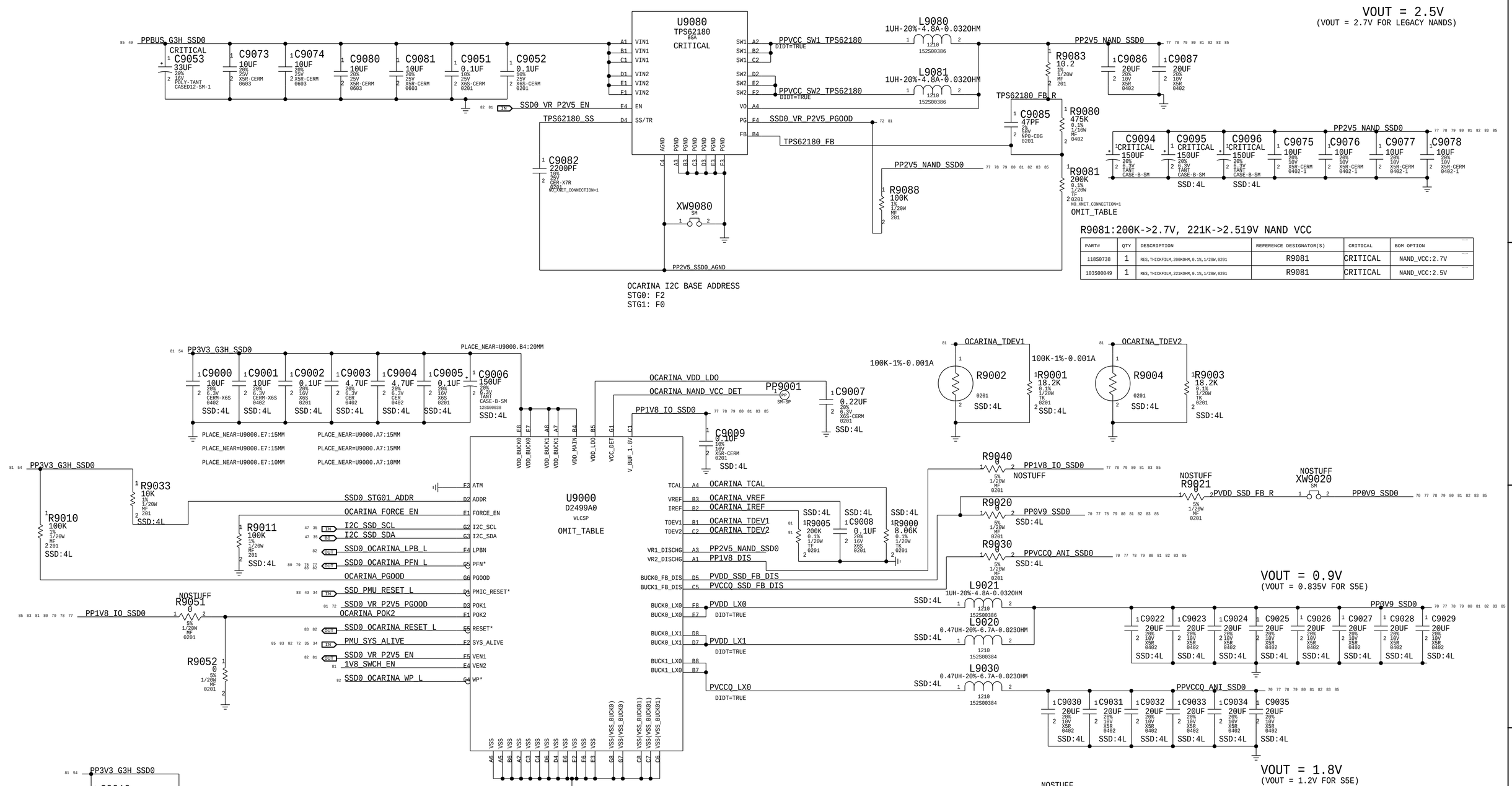

R9081:200K->2.7V, 221K->2.519V NAND VCC

PART#	QTY	DESCRIPTION	REFERENCE DESIGNATOR(S)	CRITICAL	BOM OPTION
118S0738	1	RES,THICKFILM,200KOHM,0.1%,1/20W,0201	R9081	CRITICAL	NAND_VCC:2.7V
103S00049	1	RES,THICKFILM,221KOHM,0.1%,1/20W,0201	R9081	CRITICAL	NAND_VCC:2.5V

PAGE TITLE: OCARINA PMIC & NAND VCC VR & VDDIO1 SWCH

Apple Inc.

DRAWING NUMBER: 051-05309 SIZE: D

REVISION: 5.1.0

BRANCH

PAGE: 90 OF 500

SHEET: 81 OF 98

NOTICE OF PROPRIETARY PROPERTY:
THE INFORMATION CONTAINED HEREIN IS THE PROPRIETARY PROPERTY OF APPLE INC.
THE POSESSOR AGREES TO THE FOLLOWING:
I TO MAINTAIN THIS DOCUMENT IN CONFIDENCE
II NOT TO REPRODUCE OR COPY IT
III NOT TO REVEAL OR PUBLISH IT IN WHOLE OR PART
IV ALL RIGHTS RESERVED

www.haojiyoubbs.com
QQ微信：181806465

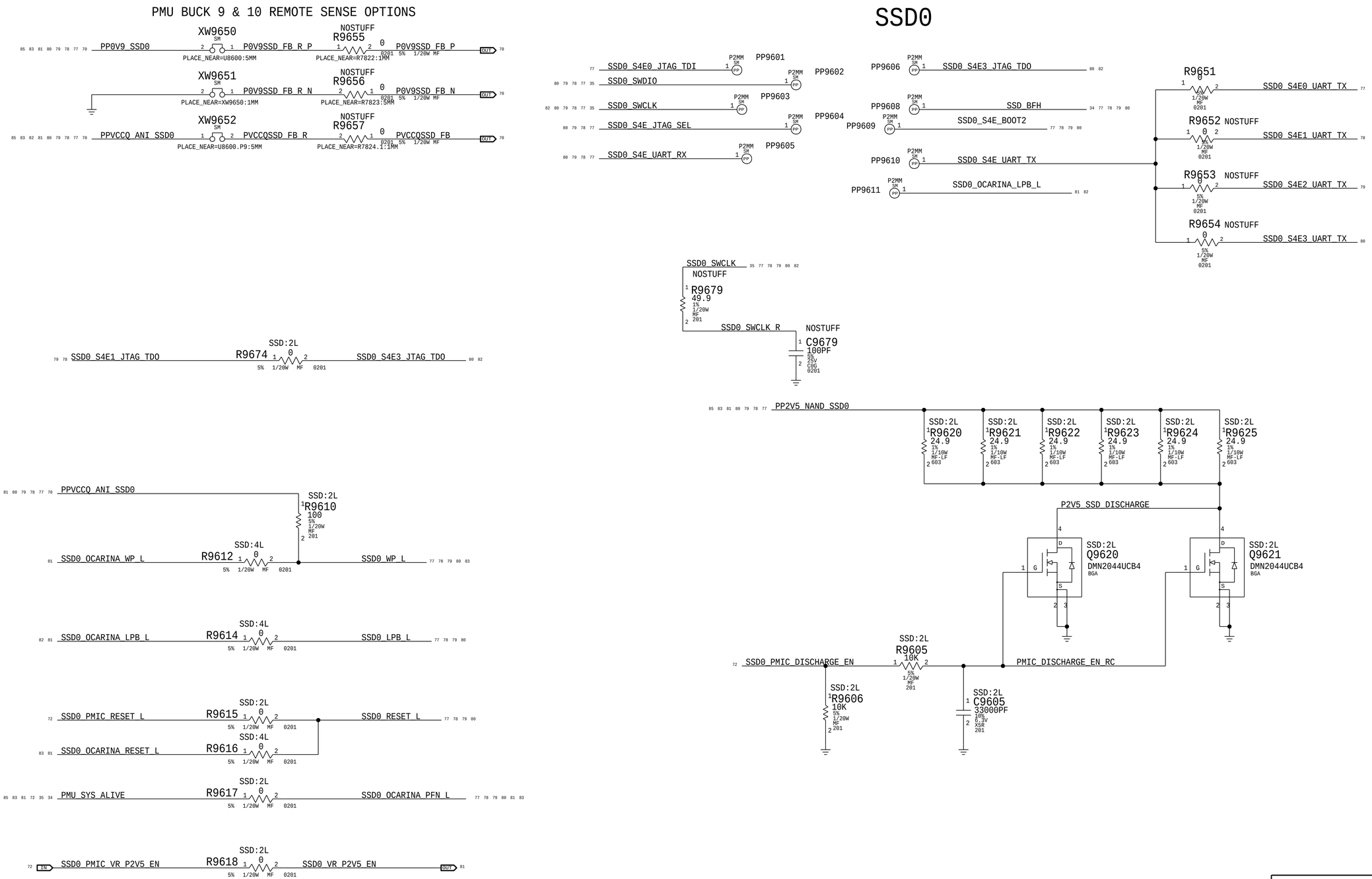

BOM_COST_GROUP=SSD

PAGE TITLE
SSD SUPPORT

Apple Inc.

DRAWING NUMBER 051-05309 SIZE D

REVISION 5.1.0

BRANCH

PAGE 96 OF 500

SHEET 82 OF 98

NOTICE OF PROPRIETARY PROPERTY:
THE INFORMATION CONTAINED HEREIN IS THE PROPRIETARY PROPERTY OF APPLE INC.
THE POSESSOR AGREES TO THE FOLLOWING:
I TO MAINTAIN THIS DOCUMENT IN CONFIDENCE
II NOT TO REPRODUCE OR COPY IT
III NOT TO REVEAL OR PUBLISH IT IN WHOLE OR PART
IV ALL RIGHTS RESERVED

www.haojiyoubbs.com
QQ微信：181806465

Functional Test Points

J5110 - DFR Display Connector

46	DFR_DISP_VSYNC		
46 36	DFR_DISP_TE	FUNC_TEST=TRUE	
46 34	DFR_DISP_INT	FUNC_TEST=TRUE	
46 36	DFR_DISP_RESET_L	FUNC_TEST=TRUE	
46	PP3V3_G3HSW_DFR	FUNC_TEST=TRUE	3 TPS
46	MIPI_DFR_CLK_FILT_CONN_P	FUNC_TEST=TRUE	
46	MIPI_DFR_CLK_FILT_CONN_N	FUNC_TEST=TRUE	
46	MIPI_DFR_DATA_FILT_CONN_P	FUNC_TEST=TRUE	
46	MIPI_DFR_DATA_FILT_CONN_N	FUNC_TEST=TRUE	
87 48 46	PP1V8_DFR	FUNC_TEST=TRUE	4 TPS
48 46	I2C_DFR_SCL_R	FUNC_TEST=TRUE	
48 46	I2C_DFR_SDA_R	FUNC_TEST=TRUE	
	GND	FUNC_TEST=TRUE	
	6 TPS		

J5100 - DFR Touch Connector

46	DFR_TOUCH_LID_OPEN_L		
46 36	DFR_TOUCH_RESET_L	FUNC_TEST=TRUE	
46 34	DFR_PWR_EN	FUNC_TEST=TRUE	
46	TP_DFR_TOUCH_GPIO2	FUNC_TEST=TRUE	
46	PP5V_G3S_DFR_FILT	FUNC_TEST=TRUE	1 TPS
46 36	SPI_DFR_CS_L	FUNC_TEST=TRUE	
46 43	SPI_DFR_MOSI	FUNC_TEST=TRUE	
46 43	SPI_DFR_MISO_R	FUNC_TEST=TRUE	
46 43	SPI_DFR_CLK	FUNC_TEST=TRUE	
46 35	DFR_TOUCH_INT_L	FUNC_TEST=TRUE	
46 36	DFR_TOUCH_CLK32K_RESET_L	FUNC_TEST=TRUE	
46	TP_DFR_TOUCH_PANEL_DETECT	FUNC_TEST=TRUE	
46	TP_DFR_TOUCH_ROM_WC	FUNC_TEST=TRUE	
	GND	FUNC_TEST=TRUE	
	6 TPS		

J6700 - Keyboard Connector

85 75 52	PP5V_G3S_KBD	
86 75	PPVOUT_S0_KBDLED	FUNC_TEST=TRUE
75	PP_KBDLED_CATHODE1	FUNC_TEST=TRUE
75	PP_KBDLED_CATHODE2	FUNC_TEST=TRUE
75 34	SOC_KBD_BKLT_PWM_R	FUNC_TEST=TRUE
61	KBD_ID1	FUNC_TEST=TRUE
61	KBD_DRIVE_Y0	FUNC_TEST=TRUE
61	KBD_DRIVE_Y1	FUNC_TEST=TRUE
61	KBD_DRIVE_Y2	FUNC_TEST=TRUE
61	KBD_DRIVE_Y3	FUNC_TEST=TRUE
61	KBD_DRIVE_Y4	FUNC_TEST=TRUE
61	KBD_DRIVE_Y5	FUNC_TEST=TRUE
61	KBD_DRIVE_Y6	FUNC_TEST=TRUE
61	KBD_DRIVE_Y7	FUNC_TEST=TRUE
61	KBD_SENSE_X0	FUNC_TEST=TRUE
61	KBD_SENSE_X1	FUNC_TEST=TRUE
61	KBD_SENSE_X2	FUNC_TEST=TRUE
61	KBD_SENSE_X3	FUNC_TEST=TRUE
61	KBD_SENSE_X4	FUNC_TEST=TRUE
61	KBD_SENSE_X5	FUNC_TEST=TRUE
61	KBD_SENSE_X6	FUNC_TEST=TRUE
61	KBD_SENSE_X7	FUNC_TEST=TRUE
61	KBD_SENSE_X8	FUNC_TEST=TRUE
61	KBD_SENSE_X9	FUNC_TEST=TRUE
61	KBD_SENSE_X10	FUNC_TEST=TRUE
61	KBD_SENSE_X11	FUNC_TEST=TRUE
61	KBD_SENSE_X12	FUNC_TEST=TRUE
61	KBD_CAP_CATHODE	FUNC_TEST=TRUE
61	PP3V3_G3H_RSLOC	FUNC_TEST=TRUE
61	KBD_RIGHT_SHIFT_KEY	FUNC_TEST=TRUE
61	KBD_LEFT_OPTION_KEY	FUNC_TEST=TRUE
61	KBD_CONTROL_KEY	FUNC_TEST=TRUE
62 61	I2C_KBD_SDA	FUNC_TEST=TRUE
62 61	I2C_KBD_SCL	FUNC_TEST=TRUE
62 61	KBD_INT_L	FUNC_TEST=TRUE
72 63 61 89	PMU_RSLOC_RST_L	FUNC_TEST=TRUE
75	PPVOUT_S0_KBDLED_R	FUNC_TEST=TRUE
61	KBD_CAPSLOCK_LED	FUNC_TEST=TRUE
61	IOXP_I2C_SCL	FUNC_TEST=TRUE
61	IOXP2_INT_L	FUNC_TEST=TRUE
61	IOXP_I2C_SDA	FUNC_TEST=TRUE
	GND	FUNC_TEST=TRUE
	6 TPS	

J6801 - TRACKPAD CONNECTOR

	ACT_GND	
62	PP5V_G3S_TPAD_CONN	FUNC_TEST=TRUE
62	PP3V3_G3S_TPAD	FUNC_TEST=TRUE
62 51	I2C_TPAD_3V3_SDA	FUNC_TEST=TRUE
62	I2C_TPAD_3V3_SCL	FUNC_TEST=TRUE
85 62	SPI_TPAD_3V3_CLK	FUNC_TEST=TRUE
62	SPI_TPAD_3V3_MISO	FUNC_TEST=TRUE
62	SPI_TPAD_3V3_CS_L	FUNC_TEST=TRUE
62	SPI_TPAD_3V3_MOSI	FUNC_TEST=TRUE
62	TPAD_3V3_SPI_EN	FUNC_TEST=TRUE
62	TPAD_3V3_SPI_INT_L	FUNC_TEST=TRUE
62	TPAD_3V3_ACTUATOR_DISABLE_L	FUNC_TEST=TRUE
62 35	TPAD_KBD_WAKE_L	FUNC_TEST=TRUE
	GND	FUNC_TEST=TRUE
	6 TPS	

J6640 - MIC Connector

60 43	PDM_DMIC_CLK0	
	AUD_DMIC0_DATA_CONN	FUNC_TEST=TRUE
60	PP1V8_DMIC	FUNC_TEST=TRUE
60 43	PDM_DMIC_CLK1	FUNC_TEST=TRUE
60	AUD_DMIC1_DATA_CONN	FUNC_TEST=TRUE
	GND	FUNC_TEST=TRUE

J6410 - REAR LEFT CONNECTOR

50	SPKRCONN_RL_OUTP	
50	SPKRCONN_RL_OUTN	FUNC_TEST=TRUE
58 36	SPKR_ID0	FUNC_TEST=TRUE
	GND	FUNC_TEST=TRUE
	2 TPS	

J6410 - FRONT LEFT CONNECTOR

	SPKRCONN_FL_OUTP	
58	SPKRCONN_FL_OUTN	FUNC_TEST=TRUE
	GND	FUNC_TEST=TRUE
	2 TPS	

J6510 - REAR RIGHT CONNECTOR

59	SPKRCONN_RR_OUTP	
59	SPKRCONN_RR_OUTN	FUNC_TEST=TRUE
59 36	SPKR_ID1	FUNC_TEST=TRUE
	GND	FUNC_TEST=TRUE
	2 TPS	

J6550 - FRONT RIGHT CONNECTOR

59	SPKRCONN_FR_OUTP	
59	SPKRCONN_FR_OUTN	FUNC_TEST=TRUE
	GND	FUNC_TEST=TRUE
	2 TPS	

J6600 - Audio Jack Connector

60	AUD_CONN_HP_LEFT	
60	AUD_CONN_HP_RIGHT	FUNC_TEST=TRUE
60	AUD_CONN_RING2	FUNC_TEST=TRUE
60	AUD_CONN_SLEEVE	FUNC_TEST=TRUE
60	AUD_CONN_HP_SENSE_L	FUNC_TEST=TRUE
60	AUD_CONN_HP_SENSE_R	FUNC_TEST=TRUE
60	AUD_CONN_TIP_SENSE	FUNC_TEST=TRUE
60	AUD_CONN_RING_SENSE	FUNC_TEST=TRUE
60	AUD_CONN_SLEEVE_XW	FUNC_TEST=TRUE
60	AUD_CONN_RING2_XW	FUNC_TEST=TRUE
	GND	FUNC_TEST=TRUE
	2 TPS	

J6950 - Battery Connector

64 63	PPVBAT_G3H_CONN	FUNC_TEST=TRUE
	GND	FUNC_TEST=TRUE
	8 TPS	

J6951 - BATTERY SENSE CONNECTOR

86 63	SYS_DETECT_L	
63	SYS_DETECT	FUNC_TEST=TRUE
63	SMBUS_3V3_BATT_SCL	FUNC_TEST=TRUE
63	SMBUS_3V3_BATT_SDA	FUNC_TEST=TRUE
74 72 50 49	SENSOR_PWR_EN	FUNC_TEST=TRUE
	GND	FUNC_TEST=TRUE
	1 TPS	

J6001 FAN CONNECTOR

55	GND_FAN	0
55	PP5V_G3S_FAN	FUNC_TEST=TRUE 2 TPS
55	FAN_RT_TACH	FUNC_TEST=TRUE 2 TPS
55	FAN_RT_PWM	FUNC_TEST=TRUE

J4900 - Mesa Connector

60 44	PP3V0_MESA_FILT_CONN	FUNC_TEST=TRUE 2 TPS
44 60	PP16V0_MESA_FILT_CONN	FUNC_TEST=TRUE 1 TPS
60 44	PP1V8_MESA_FILT_CONN	FUNC_TEST=TRUE 1 TPS
60 44	SPI_MESA_MISO_CONN	FUNC_TEST=TRUE 4 TPS
60 44	SPI_MESA_MOSI_CONN	FUNC_TEST=TRUE 2 TPS
60 44	SPI_MESA_CLK_CONN	FUNC_TEST=TRUE 3 TPS
60 44	MESA_INT_CONN	FUNC_TEST=TRUE 1 TPS
60 44	MESA_BOOST_EN_CONN	FUNC_TEST=TRUE
89 60 44	PMU_ONOFF_R_L_CONN	FUNC_TEST=TRUE
	GND	FUNC_TEST=TRUE
	6 TPS	

J8500 - eDP Connector

86 75	PPVOUT_S0_LCDBKLT_F	FUNC_TEST=TRUE
86 76 75	PPVOUT_S0_LCDBKLT	FUNC_TEST=TRUE
	1 TPS	
76 4	EDP_BKLT_PWM	FUNC_TEST=TRUE
75 4	EDP_BKLT_EN	FUNC_TEST=TRUE
76 4	EDP_PANEL_PWR_EN	FUNC_TEST=TRUE
76	TP_LCD_IRQ_L	FUNC_TEST=TRUE
76 43	DP_INT_HPD	FUNC_TEST=TRUE
76	EDP_PANEL_PWR_BUF_EN	FUNC_TEST=TRUE
	PP3V3_S0SW_LCD	FUNC_TEST=TRUE
88 76	PP5V_S0SW_LCD	FUNC_TEST=TRUE
86 76 74 73 69 67 66 65 51	PP5V_G3S_CPUREG_MISC	FUNC_TEST=TRUE
75	PPVIN_S0SW_LCDBKLT	FUNC_TEST=TRUE
	GND	FUNC_TEST=TRUE
	12 TPS	

J3300 - Left USB-C Connector

87 30 28 27	PP20V_USBC_XA_VBUS	
30 28	USBC_XA_CC1	FUNC_TEST=TRUE
30 28	USBC_XA_CC2	FUNC_TEST=TRUE
30 28	USBC_XA_SBU1	FUNC_TEST=TRUE
	USBC_XA_SBU2	FUNC_TEST=TRUE
87 30 29	PP20V_USBC_XB_VBUS	FUNC_TEST=TRUE
30 29	USBC_XB_CC1	FUNC_TEST=TRUE
30 29	USBC_XB_CC2	FUNC_TEST=TRUE
30 29	USBC_XB_SBU1	FUNC_TEST=TRUE
30 29	USBC_XB_SBU2	FUNC_TEST=TRUE
30	TP_USBC_PP20V_XA	FUNC_TEST=TRUE
30	TP_USBC_PP20V_XB	FUNC_TEST=TRUE
89 28	USB_SOC_TYPEC_P	FUNC_TEST=TRUE
89 28	USB_SOC_TYPEC_N	FUNC_TEST=TRUE
	GND	FUNC_TEST=TRUE
	48 TPS	
29 27	USB3_BSSB_D2R_R_P	FUNC_TEST=TRUE
29 27	USB3_BSSB_D2R_R_N	FUNC_TEST=TRUE
	USB3_BSSB_R2D_P	FUNC_TEST=TRUE
29 27	USB3_BSSB_R2D_N	FUNC_TEST=TRUE
	GND	FUNC_TEST=TRUE
	12 TPS	

PROBE BLOCK GRID - DFU/SOC/DCI

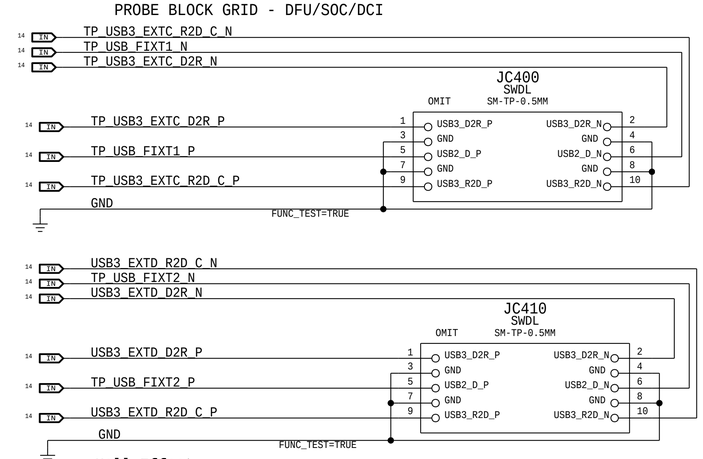

Hall Effect

43 35	SMC_LID_LEFT	
43 35	SMC_LID_RIGHT	FUNC_TEST=TRUE
62 46 43	IPD_LID_OPEN	FUNC_TEST=TRUE
	GND	FUNC_TEST=TRUE
	1 TPS	

DFU/SOC/FCT DEBUG

34 27	SOC_USB_VBUS	
89 72 34 28	SOC_FORCE_DFU	FUNC_TEST=TRUE
34 28	SOC_DFU_STATUS	FUNC_TEST=TRUE
35 29 28	SOC_DOCK_CONNECT	FUNC_TEST=TRUE
89	DFUMUX_SEL	FUNC_TEST=TRUE
13	SOC_SWD_MUX_SEL_PCH	FUNC_TEST=TRUE
35	SOC_COLD_RESET_L	FUNC_TEST=TRUE
89 34	USB_SOC_N	FUNC_TEST=TRUE
89 34	USB_SOC_P	FUNC_TEST=TRUE
27 12	PCH_UART_DEBUG_R2D	FUNC_TEST=TRUE
27 12	PCH_UART_DEBUG_D2R	FUNC_TEST=TRUE
29 27	SWD_SOC_SWCLK_XB	FUNC_TEST=TRUE
29 27	SWD_SOC_SWDIO_XB	FUNC_TEST=TRUE
35	DEBUG_JTAG_SOC_TDI	FUNC_TEST=TRUE
35	DEBUG_JTAG_SOC_TDO	FUNC_TEST=TRUE
35	TP_JTAG_SOC_TRST_L	FUNC_TEST=TRUE
89 35	SMC_DEBUGPRT_TX	FUNC_TEST=TRUE 7 TPS
89 35	SMC_DEBUGPRT_RX	FUNC_TEST=TRUE 1 TPS
36	SOC_DEBUGPRT_TX	FUNC_TEST=TRUE
36	SOC_DEBUGPRT_RX	FUNC_TEST=TRUE
72 47 35	I2C_PWR_SCL	FUNC_TEST=TRUE
72 47 35	I2C_PWR_SDA	FUNC_TEST=TRUE
47 35 29 27	I2C_UPC_SCL	FUNC_TEST=TRUE
47 35 29 27	I2C_UPC_SDA	FUNC_TEST=TRUE
	GND	FUNC_TEST=TRUE
	10 TPS	

DFU/SOC/FCT DISCHARGE

64	PPDCIN_G3H_CHGR	
64	PPVBAT_G3H_CHGR_REG	FUNC_TEST=TRUE

Memory Power

23 22 21 20 19 18 88 74 73 16	PP1V2_S3	
73 72	PVDDQ_PGOOD	FUNC_TEST=TRUE
89 73 72	PVDDQ_EN	FUNC_TEST=TRUE
88 51 23 22 21 20	PP1V8_S3_MEM	FUNC_TEST=TRUE 4 TPS
88 50 9 7 6	PP1V2_S3_CPUDDR	FUNC_TEST=TRUE
88 73 24	PP0V6_S0_DDRVTT	FUNC_TEST=TRUE 4 TPS
	GND	FUNC_TEST=TRUE
	5 TPS	

Wireless/BT Power

50 32	PP3V3_G3S_WLANBT	
51 32	PP1V8_G3S_WLANBT	FUNC_TEST=TRUE
	GND	FUNC_TEST=TRUE
	2 TPS	

DFU/SOC/FCT DMM/Power Sequence

87 64 49 27	PPDCIN_G3H	
6 TPS 86 74 69 63 54 52	PP3V3_G3H	FUNC_TEST=TRUE
87 66 50 9 7	PPVCC_S0_CPU	FUNC_TEST=TRUE
87 67 50 10 7	PPVCCGT_S0_CPU	FUNC_TEST=TRUE
87 66 52 9 7	PPVCCSA_S0_CPU	FUNC_TEST=TRUE
87 73 9 7 4	PPVCCIO_S0_CPU	FUNC_TEST=TRUE
86 69 9 7	PPVCCEDRAM_S0_CPU	FUNC_TEST=TRUE
6 TPS 71 18 9 7	PP1V_S0SW	FUNC_TEST=TRUE
74 9 7	PP1V2_S0SW	FUNC_TEST=TRUE
70 69 65 42 18 17 9 7 5	PP1V_S3	FUNC_TEST=TRUE
86 73 70 54 16 11 7	PP1V_PRIM	FUNC_TEST=TRUE
86 70 54 11 7	PPVPCORE_S5	FUNC_TEST=TRUE
71 13 11 7	PP3V_G3H_RTC	FUNC_TEST=TRUE
72 18	ALL_SYS_PWRGD	FUNC_TEST=TRUE
72 14	PCH_RTC_RESET_L	FUNC_TEST=TRUE
42 13	PM_PCH_PWROK	FUNC_TEST=TRUE
42 13	PM_PCH_SYS_PWROK	FUNC_TEST=TRUE
42 16 13	PM_RSMRST_L	FUNC_TEST=TRUE
89 25 15 13 12	PM_SLP_S3_L	FUNC_TEST=TRUE
89 72 35 18	PM_SLP_S0_L	FUNC_TEST=TRUE
18 17 15 13	PLT_RST_L	FUNC_TEST=TRUE
85 72 17 5	PM_THRMTRIP_L	FUNC_TEST=TRUE
72 16 13	PCH_PWRBTN_L	FUNC_TEST=TRUE
5	CPU_PROCHOT_R_L	FUNC_TEST=TRUE
72 5	CPU_CATERR_L	FUNC_TEST=TRUE
72 65	CPU_VR_READY	FUNC_TEST=TRUE
72 68	PMU_PVDDMAIN_EN	FUNC_TEST=TRUE
85 72 63 29 28	UPC_PMU_RESET	FUNC_TEST=TRUE
72 71 63 61 57 54 50 29 28 27 89 86 76 74	PP3V3_G3H_RTC	FUNC_TEST=TRUE
64 63	CHGR_EN_MVR	FUNC_TEST=TRUE
74 72	P3V3G3S_EN	FUNC_TEST=TRUE
76 75 74 62 57 51 50 45	PP3V3_G3S	FUNC_TEST=TRUE
89 74 72	P1V8G3S_EN	FUNC_TEST=TRUE
85 81 80 79 78 77	PP1V8_IO_SSD0	FUNC_TEST=TRUE
85 82 81 80 79 78 77 70	PPVCCQ_ANI_SSD0	FUNC_TEST=TRUE
85 82 81 80 79 78 77 70	PP0V9_SSD0	FUNC_TEST=TRUE
85 82 81 80 79 78 77	PP2V5_NAND_SSD0	FUNC_TEST=TRUE
82 80 79 78 77	SSD0_WP_L	FUNC_TEST=TRUE
82 81 80 79 78 77	SSD0_OCARINA_PFN_L	FUNC_TEST=TRUE
82 81	SSD0_OCARINA_RESET_L	FUNC_TEST=TRUE
81 43 34	SSD_PMU_RESET_L	FUNC_TEST=TRUE
71 40	PP3V3_AWAKE	FUNC_TEST=TRUE
85 72 60 35	PMU_COLD_RESET_L	FUNC_TEST=TRUE
89 13	PM_SLP_S4_L	FUNC_TEST=TRUE
89 13	PM_SLP_S5_L	FUNC_TEST=TRUE
35	TP_SMC_FIXTURE_MODE_L	FUNC_TEST=TRUE
60 47 44 43 42 40 34 29 28 27 89 86 81 74 72 71 70 64 63	PP1V8_SLPS2R	FUNC_TEST=TRUE
85 72 34	SOC_SOCHOT_L	FUNC_TEST=TRUE
71 40	PP1V2_AWAKE	FUNC_TEST=TRUE
86 70 43 38	PP0V82_SLPDDR	FUNC_TEST=TRUE
86 70 43 38	PPVDDCPU_AWAKE	FUNC_TEST=TRUE
92 18 17 16 15 14 13 12 11 7 74 73 72 70 69 65 53 17 11 7	PP1V8_S5	FUNC_TEST=TRUE
87 86 75 72 64 62 49	PPBUS_G3H	FUNC_TEST=TRUE
58 57 55 51 48 47 45 44 43 18 76 74 68 62 61 60 59	PP1V8_G3S	FUNC_TEST=TRUE
89 72 34 28	PMU_ACTIVE_READY	FUNC_TEST=TRUE
47 43 42 18 14 13 12 11 7 5 4 89 74 73 71 69	PP3V3_S5	FUNC_TEST=TRUE
73 72	PVCCIO_EN	FUNC_TEST=TRUE
74 73 71 12	CPU_C10_GATE_L	FUNC_TEST=TRUE
86 70 43 39	PP0V9_SLPDDR	FUNC_TEST=TRUE
71 40 39 34	PP1V1_SLPDDR	FUNC_TEST=TRUE
86 71 70 40 39	PP1V1_SLPS2R	FUNC_TEST=TRUE
72 70 62 43 42 40 37 27	PP1V8_AWAKE	FUNC_TEST=TRUE
70	PP1V8_SLPS2R_PMUVDDGPIO	FUNC_TEST=TRUE
89 72 71	P1V1_SLPDDR_SOCFET_EN	FUNC_TEST=TRUE
72 32	PMU_CLK32K_WLANBT	FUNC_TEST=TRUE
85 72 35	SOC_WDOG	FUNC_TEST=TRUE
72 35	PMU_CLK32K_SOC	FUNC_TEST=TRUE
85 82 81 72 35 34	PMU_SYS_ALIVE	FUNC_TEST=TRUE
72 68	P5VG3S_EN	FUNC_TEST=TRUE
71 39	PP0V8_SLPS2R	FUNC_TEST=TRUE
86 70 38	PPVDDCPUSRAM_AWAKE	FUNC_TEST=TRUE
72 68	P5VG3S_PGOOD	FUNC_TEST=TRUE
42 16 13	PM_SYSRST_L	FUNC_TEST=TRUE
42 35	SMC_SYSRST_L	FUNC_TEST=TRUE
75 68 55 54 52 51 50 46 29 28 86	PP5V_G3S	FUNC_TEST=TRUE
77	SSD0_S4E0_ANI0_VREF	FUNC_TEST=TRUE
77	SSD0_S4E0_ANI1_VREF	FUNC_TEST=TRUE
78	SSD0_S4E1_ANI0_VREF	FUNC_TEST=TRUE
78	SSD0_S4E1_ANI1_VREF	FUNC_TEST=TRUE
79	SSD0_S4E2_ANI0_VREF	FUNC_TEST=TRUE
79	SSD0_S4E2_ANI1_VREF	FUNC_TEST=TRUE
80	SSD0_S4E3_ANI0_VREF	FUNC_TEST=TRUE
80	SSD0_S4E3_ANI1_VREF	FUNC_TEST=TRUE
	GND	FUNC_TEST=TRUE
	8 TPS	

PAGE TITLE
FCT

Apple Inc.

DRAWING NUMBER 051-05309 SIZE D
REVISION 5.1.0
BRANCH
PAGE 124 OF 500
SHEET 83 OF 98

NOTICE OF PROPRIETARY PROPERTY:
THE INFORMATION CONTAINED HEREIN IS THE PROPRIETARY PROPERTY OF APPLE INC.
THE POSESSOR AGREES TO THE FOLLOWING:
I TO MAINTAIN THIS DOCUMENT IN CONFIDENCE
II NOT TO REPRODUCE OR COPY IT
III NOT TO REVEAL OR PUBLISH IT IN WHOLE OR PART
IV ALL RIGHTS RESERVED

www.haojiyoubbs.com
QQ微信：181806465

	8	7	6	5	4	3	2	1

SAR Fusion Sensor Debug

43 35	OUT	SPI_ACCEL_CS_L	PPC561
43 35	OUT	SPI_AOP_SENSOR_MISO	PPC564
43 35	OUT	ACCEL_INT1	PPC565

PMIC Switch Nodes

70	OUT	PVDDCPUAWAKE_SW0	PPC509
70	OUT	PVDDCPUAWAKE_SW1	PPC512
70	OUT	PVDDCPUAWAKE_SW2	PPC513
70	OUT	PVDDCPUAWAKE_SW3	PPC514
70	OUT	PVDDCPUSRAMAWAKE_SW0	PPC515
70	OUT	P0V8SLPDDR_SW0	PPC516
70	OUT	P0V8SLPDDR_SW1	PPC517
70	OUT	P1V8SLPS2R_SW0	PPC518
70	OUT	P1V1SLPS2R_SW0	PPC521
70	OUT	P1V1SLPS2R_SW1	PPC522
70	OUT	P0V9SLPDDR_SW0	PPC523
70	OUT	P0V9SLPDDR_SW1	PPC524
70	OUT	PVPCORES5_SW0	PPC527
70	OUT	PVPCORES5_SW1	PPC525
70	OUT	P1VPRIM_SW1	PPC528

76 36		MIPI_FTCAM_DATA_P<0>	PPC549
76 36		MIPI_FTCAM_DATA_N<0>	PPC550
76 36		MIPI_FTCAM_CLK_P	PPC551
76 36		MIPI_FTCAM_CLK_N	PPC552

77 37	OUT	PCIE_SSD0_D2R_N<0>	PPC510
77 37	OUT	PCIE_SSD0_D2R_P<0>	PPC511

37 14	OUT	PCIE_CLK100M_SOC_N	PPC539
37 14	OUT	PCIE_CLK100M_SOC_P	PPC540
78 77 37	OUT	PCIE_CLK100M_SSD0_01_N	PPC541
78 77 37	OUT	PCIE_CLK100M_SSD0_01_P	PPC542
80 79 37	OUT	PCIE_CLK100M_SSD0_23_N	PPC553
80 79 37	OUT	PCIE_CLK100M_SSD0_23_P	PPC554
25 14	OUT	PCIE_CLK100M_TBT_X_N	PPC543
25 14	OUT	PCIE_CLK100M_TBT_X_P	PPC544

SOC SENSE

72 38		SOC_VDDCPU_SENSE	PPC530

ACE-TR AUX/LS

28 25		USBC_XA_AUXLSX1	PPC570
28 25		USBC_XA_AUXLSX2	PPC571
29 25		USBC_XB_AUXLSX1	PPC572
29 25		USBC_XB_AUXLSX2	PPC573

ACE GPIO PPs

28 27		UPC_XA_SER_DBG	PPC578
29 27		UPC_XB_SER_DBG	PPC579

5	OUT	XDP_BPM_L<0>	TPC520

PAGE TITLE

PROBE POINTS

Apple Inc.

DRAWING NUMBER	051-05309
SIZE	D
REVISION	5.1.0
BRANCH	
PAGE	125 OF 500
SHEET	84 OF 98

NOTICE OF PROPRIETARY PROPERTY:
THE INFORMATION CONTAINED HEREIN IS THE PROPRIETARY PROPERTY OF APPLE INC.
THE POSESSOR AGREES TO THE FOLLOWING:
I TO MAINTAIN THIS DOCUMENT IN CONFIDENCE
II NOT TO REPRODUCE OR COPY IT
III NOT TO REVEAL OR PUBLISH IT IN WHOLE OR PART
IV ALL RIGHTS RESERVED

www.haojiyoubbs.com
QQ微信：181806465

KEYBOARD CONNECTOR 5V

83 75 52 PP5V_G3S_KBD

CD500 12PF 5% 25V NP0-C0G 0201

TRACKPAD SPI CLK

83 62 SPI_TPAD_3V3_CLK

CD510 12PF 5% 25V NP0-C0G 0201

EOPIO EDRAM VR HIGH SIDE

87 73 69 67 66 65 49 43 PPBUS_HS_CPU

CD520 12PF 5% 25V NP0-C0G 0201

CD521 3.0PF +/-0.1PF 25V NP0-C0G 0201

NAND VCC

85 83 82 81 80 79 78 77 PP2V5_NAND_SSD0

CD550 12PF 5% 25V NP0-C0G 0201

CD551 3.0PF +/-0.1PF 25V NP0-C0G 0201

CALPE BUCK 9

85 83 82 81 80 79 78 77 70 PP0V9_SSD0

CD532 12PF 5% 25V NP0-C0G 0201

CD533 3.0PF +/-0.1PF 25V NP0-C0G 0201

CALPE BUCK 10

85 83 82 81 80 79 78 77 70 PPVCCQ_ANI_SSD0

CD542 12PF 5% 25V NP0-C0G 0201

CD543 3.0PF +/-0.1PF 25V NP0-C0G 0201

S4E

81 49 PPBUS_G3H_SSD0

CD5N0 12PF 5% 25V NP0-C0G 0201

CD5N1 3.0PF +/-0.1PF 25V NP0-C0G 0201

OCARINA VDD

85 83 82 81 80 79 78 77 70 PP0V9_SSD0

CD530 12PF 5% 25V NP0-C0G 0201

CD531 3.0PF +/-0.1PF 25V NP0-C0G 0201

OCARINA VDDIO2

85 83 82 81 80 79 78 77 70 PPVCCQ_ANI_SSD0

CD540 12PF 5% 25V NP0-C0G 0201

CD541 3.0PF +/-0.1PF 25V NP0-C0G 0201

CD545 12PF 5% 25V NP0-C0G 0201

CD546 3.0PF +/-0.1PF 25V NP0-C0G 0201

S4E U8600 VDD

85 83 82 81 80 79 78 77 70 PP0V9_SSD0

CD560 12PF 5% 25V NP0-C0G 0201

CD561 12PF 5% 25V NP0-C0G 0201

CD562 3.0PF +/-0.1PF 25V NP0-C0G 0201

CD563 3.0PF +/-0.1PF 25V NP0-C0G 0201

CD564 12PF 5% 25V NP0-C0G 0201

CD565 3.0PF +/-0.1PF 25V NP0-C0G 0201

S4E U8600 VCC

85 83 82 81 80 79 78 77 PP2V5_NAND_SSD0

CD570 12PF 5% 25V NP0-C0G 0201

CD571 12PF 5% 25V NP0-C0G 0201

CD572 3.0PF +/-0.1PF 25V NP0-C0G 0201

CD573 3.0PF +/-0.1PF 25V NP0-C0G 0201

S4E U8600 VDDIO1

85 83 81 80 79 78 77 PP1V8_IO_SSD0

CD580 12PF 5% 25V NP0-C0G 0201

CD582 3.0PF +/-0.1PF 25V NP0-C0G 0201

S4E U8600 VDDIO2

85 83 82 81 80 79 78 77 70 PPVCCQ_ANI_SSD0

CD590 12PF 5% 25V NP0-C0G 0201

CD591 12PF 5% 25V NP0-C0G 0201

CD592 3.0PF +/-0.1PF 25V NP0-C0G 0201

CD593 3.0PF +/-0.1PF 25V NP0-C0G 0201

S4E U8700 VDD

85 83 82 81 80 79 78 77 70 PP0V9_SSD0

CD5A0 12PF 5% 25V NP0-C0G 0201

CD5A1 12PF 5% 25V NP0-C0G 0201

CD5A2 3.0PF +/-0.1PF 25V NP0-C0G 0201

CD5A3 3.0PF +/-0.1PF 25V NP0-C0G 0201

CD5A4 12PF 5% 25V NP0-C0G 0201

CD5A5 3.0PF +/-0.1PF 25V NP0-C0G 0201

S4E U8700 VCC

85 83 82 81 80 79 78 77 PP2V5_NAND_SSD0

CD5B0 12PF 5% 25V NP0-C0G 0201

CD5B1 12PF 5% 25V NP0-C0G 0201

CD5B2 3.0PF +/-0.1PF 25V NP0-C0G 0201

CD5B3 3.0PF +/-0.1PF 25V NP0-C0G 0201

S4E U8700 VDDIO1

85 83 81 80 79 78 77 PP1V8_IO_SSD0

CD5C0 12PF 5% 25V NP0-C0G 0201

CD5C2 3.0PF +/-0.1PF 25V NP0-C0G 0201

S4E U8700 VDDIO2

85 83 82 81 80 79 78 77 70 PPVCCQ_ANI_SSD0

CD5D0 12PF 5% 25V NP0-C0G 0201

CD5D2 3.0PF +/-0.1PF 25V NP0-C0G 0201

S4E U8800 VDD

85 83 82 81 80 79 78 77 70 PP0V9_SSD0

CD5E0 12PF 5% 25V NP0-C0G 0201

CD5E1 12PF 5% 25V NP0-C0G 0201

CD5E2 3.0PF +/-0.1PF 25V NP0-C0G 0201

CD5E3 3.0PF +/-0.1PF 25V NP0-C0G 0201

CD5E4 12PF 5% 25V NP0-C0G 0201

CD5E5 3.0PF +/-0.1PF 25V NP0-C0G 0201

S4E U8800 VCC

85 83 82 81 80 79 78 77 PP2V5_NAND_SSD0

CD5F0 12PF 5% 25V NP0-C0G 0201

CD5F1 12PF 5% 25V NP0-C0G 0201

CD5F2 3.0PF +/-0.1PF 25V NP0-C0G 0201

CD5F3 3.0PF +/-0.1PF 25V NP0-C0G 0201

S4E U8800 VDDIO1

85 83 81 80 79 78 77 PP1V8_IO_SSD0

CD5G0 12PF 5% 25V NP0-C0G 0201

CD5G2 3.0PF +/-0.1PF 25V NP0-C0G 0201

S4E U8800 VDDIO2

85 83 82 81 80 79 78 77 70 PPVCCQ_ANI_SSD0

CD5H0 12PF 5% 25V NP0-C0G 0201

CD5H2 3.0PF +/-0.1PF 25V NP0-C0G 0201

S4E U8900 VDD

85 83 82 81 80 79 78 77 70 PP0V9_SSD0

CD5J0 12PF 5% 25V NP0-C0G 0201

CD5J1 12PF 5% 25V NP0-C0G 0201

CD5J2 3.0PF +/-0.1PF 25V NP0-C0G 0201

CD5J3 3.0PF +/-0.1PF 25V NP0-C0G 0201

S4E U8900 VCC

85 83 82 81 80 79 78 77 PP2V5_NAND_SSD0

CD5K0 12PF 5% 25V NP0-C0G 0201

CD5K1 12PF 5% 25V NP0-C0G 0201

CD5K2 3.0PF +/-0.1PF 25V NP0-C0G 0201

CD5K3 3.0PF +/-0.1PF 25V NP0-C0G 0201

S4E U8900 VDDIO1

85 83 81 80 79 78 77 PP1V8_IO_SSD0

CD5L0 12PF 5% 25V NP0-C0G 0201

CD5L2 3.0PF +/-0.1PF 25V NP0-C0G 0201

S4E U8900 VDDIO2

85 83 82 81 80 79 78 77 70 PPVCCQ_ANI_SSD0

CD5M0 12PF 5% 25V NP0-C0G 0201

CD5M2 3.0PF +/-0.1PF 25V NP0-C0G 0201

83 82 81 72 35 34 PMU_SYS_ALIVE

CD5DP0 100PF 5% 25V C0G 0201

83 72 60 35 PMU_COLD_RESET_L

CD5DP1 100PF 5% 25V C0G 0201

83 72 35 SOC_WDOG

CD5DP2 100PF 5% 25V C0G 0201

83 72 17 5 PM_THRMTRIP_L

CD5DP3 100PF 5% 25V C0G 0201

83 72 34 SOC_SOCHOT_L

CD5DP4 100PF 5% 25V C0G 0201

35 15 SOC_PERST_L

CD5DP5 100PF 5% 25V C0G 0201

83 72 63 29 28 UPC_PMU_RESET

CD5DP6 100PF 5% 25V C0G 0201

BOM_COST_GROUP=DESENSE

SYNC_MASTER= SYNC_DATE=

PAGE TITLE

DESENSE 1

Apple Inc.

DRAWING NUMBER	051-05309
SIZE	D
REVISION	5.1.0
BRANCH	
PAGE	135 OF 500
SHEET	85 OF 98

NOTICE OF PROPRIETARY PROPERTY:

THE INFORMATION CONTAINED HEREIN IS THE PROPRIETARY PROPERTY OF APPLE INC.
THE POSESSOR AGREES TO THE FOLLOWING:

I TO MAINTAIN THIS DOCUMENT IN CONFIDENCE
II NOT TO REPRODUCE OR COPY IT
III NOT TO REVEAL OR PUBLISH IT IN WHOLE OR PART
IV ALL RIGHTS RESERVED

www.haojiyoubbs.com
QQ微信：181806465

CALPE VDD MAIN HIGH SIDE INPUT

71 70 52 PP3V3_G3H_PMU_VDDMAIN

CD670 12PF 5% 25V NP0-C0G 0201	CD671 12PF 5% 25V NP0-C0G 0201	CD672 12PF 5% 25V NP0-C0G 0201	CD673 12PF 5% 25V NP0-C0G 0201	CD674 12PF 5% 25V NP0-C0G 0201	CD675 12PF 5% 25V NP0-C0G 0201	CD676 12PF 5% 25V NP0-C0G 0201	CD677 12PF 5% 25V NP0-C0G 0201	CD678 12PF 5% 25V NP0-C0G 0201	CD679 12PF 5% 25V NP0-C0G 0201
CD6G0 3.0PF +/-0.1PF 25V NP0-C0G 0201	CD6G1 3.0PF +/-0.1PF 25V NP0-C0G 0201	CD6G2 3.0PF +/-0.1PF 25V NP0-C0G 0201	CD6G3 3.0PF +/-0.1PF 25V NP0-C0G 0201	CD6G4 3.0PF +/-0.1PF 25V NP0-C0G 0201	CD6G5 3.0PF +/-0.1PF 25V NP0-C0G 0201	CD6G6 3.0PF +/-0.1PF 25V NP0-C0G 0201	CD6G7 3.0PF +/-0.1PF 25V NP0-C0G 0201	CD6G8 3.0PF +/-0.1PF 25V NP0-C0G 0201	CD6G9 3.0PF +/-0.1PF 25V NP0-C0G 0201

VR 5V G3S

75 68 55 54 52 51 50 46 29 28 83 PP5V_G3S

CD620 12PF 5% 25V NP0-C0G 0201	CD621 12PF 5% 25V NP0-C0G 0201	CD622 12PF 5% 25V NP0-C0G 0201
CD623 3.0PF +/-0.1PF 25V NP0-C0G 0201	CD624 3.0PF +/-0.1PF 25V NP0-C0G 0201	CD625 3.0PF +/-0.1PF 25V NP0-C0G 0201

VR 3V3 G3H

3.3
83 74 68 63 54 52 PP3V3_G3H

CD630 12PF 5% 25V NP0-C0G 0201	CD631 12PF 5% 25V NP0-C0G 0201	CD632 12PF 5% 25V NP0-C0G 0201
CD633 3.0PF +/-0.1PF 25V NP0-C0G 0201	CD634 3.0PF +/-0.1PF 25V NP0-C0G 0201	CD635 3.0PF +/-0.1PF 25V NP0-C0G 0201

VR 3V3 G3H HIGH SIDE

68 49 PPVIN_G3H_P3V3G3H

CD640 12PF 5% 25V NP0-C0G 0201	CD641 3.0PF +/-0.1PF 25V NP0-C0G 0201

VR 5V G3S HIGH SIDE

68 49 PPVIN_G3H_P5VG3S

CD650 12PF 5% 25V NP0-C0G 0201	CD651 3.0PF +/-0.1PF 25V NP0-C0G 0201

BATTERY CONNECTOR SYS DETECT

83 63 SYS_DETECT_L

CD660 12PF 5% 25V NP0-C0G 0201	CD661 3.0PF +/-0.1PF 25V NP0-C0G 0201

VR 5V ALS

83 76 74 73 69 67 66 65 51 PP5V_G3S_CPUREG_MISC

CD6R1 12PF 5% 25V NP0-C0G 0201	CD6R2 3.0PF +/-0.1PF 25V NP0-C0G 0201

CALPE PCH 1V1 PRIM

83 73 70 54 16 11 7 PP1V_PRIM

CD680 12PF 5% 25V NP0-C0G 0201	CD681 12PF 5% 25V NP0-C0G 0201

CALPE 0V82 SLPDDR

83 70 43 38 PP0V82_SLPDDR

CD690 12PF 5% 25V NP0-C0G 0201	CD691 12PF 5% 25V NP0-C0G 0201

CALPE CPU AWAKE

83 70 43 30 PPVDDCPU_AWAKE

CD6A0 12PF 5% 25V NP0-C0G 0201	CD6A1 3.0PF +/-0.1PF 25V NP0-C0G 0201

CALPE CPU SRAM AWAKE

83 70 38 PPVDDCPUSRAM_AWAKE

CD6B0 12PF 5% 25V NP0-C0G 0201	CD6B1 3.0PF +/-0.1PF 25V NP0-C0G 0201

CALPE 1V8 SLPS2R

60 47 44 43 42 40 34 29 28 27 89 83 81 74 72 71 70 64 63 PP1V8_SLPS2R

CD6C0 12PF 5% 25V NP0-C0G 0201	CD6C1 3.0PF +/-0.1PF 25V NP0-C0G 0201

CALPE 1V1 SLPS2R

83 71 70 40 39 PP1V1_SLPS2R

CD6D0 12PF 5% 25V NP0-C0G 0201	CD6D1 3.0PF +/-0.1PF 25V NP0-C0G 0201

CALPE 0V9 SLPDDR

83 70 43 39 PP0V9_SLPDDR

CD6E0 12PF 5% 25V NP0-C0G 0201	CD6E1 3.0PF +/-0.1PF 25V NP0-C0G 0201

CALPE PCH VCORE

83 70 54 11 7 PPVPCORE_S5

CD6F0 12PF 5% 25V NP0-C0G 0201	CD6F1 3.0PF +/-0.1PF 25V NP0-C0G 0201

LCD BACKLIGHT DRIVER VOUT

83 75 PPVOUT_S0_LCDBKLT_F

CD600 3PF +/-0.1PF 100V C0G 0201	CD601 3PF +/-0.1PF 100V C0G 0201

83 76 75 PPVOUT_S0_LCDBKLT

CD6J0 3PF +/-0.1PF 100V C0G 0201	CD6J1 3PF +/-0.1PF 100V C0G 0201

EDRAM

83 69 9 7 PPVCCEDRAM_S0_CPU

CD6L0 12PF 5% 25V NP0-C0G 0201	CD6L1 3.0PF +/-0.1PF 25V NP0-C0G 0201	CD6L2 12PF 5% 25V NP0-C0G 0201	CD6L3 3.0PF +/-0.1PF 25V NP0-C0G 0201

72 71 63 61 57 54 50 29 28 27 89 83 76 74 PP3V3_G3H_RTC

CD6M0 12PF 5% 25V NP0-C0G 0201	CD6M1 3.0PF +/-0.1PF 25V NP0-C0G 0201

63 PPVIN_G3H_P3V3G3HRTC_R

CD6N0 12PF 5% 25V NP0-C0G 0201	CD6N1 3.0PF +/-0.1PF 25V NP0-C0G 0201

87 83 75 72 64 62 49 PPBUS_G3H

CD6P2 12PF 5% 25V NP0-C0G 0201	CD6P0 12PF 5% 25V NP0-C0G 0201	CD6P1 3.0PF +/-0.1PF 25V NP0-C0G 0201

83 75 PPVOUT_S0_KBDLED

CD6S0 12PF 5% 100V C0G 0201	CD6S1 12PF 5% 100V C0G 0201	CD6S2 12PF 5% 100V C0G 0201	CD6S3 12PF 5% 100V C0G 0201

BOM_COST_GROUP=DESENSE

SYNC_MASTER= SYNC_DATE=

PAGE TITLE: DESENSE 2

Apple Inc.

DRAWING NUMBER: 051-05309 SIZE: D

REVISION: 5.1.0

BRANCH

PAGE: 136 OF 500

SHEET: 86 OF 98

NOTICE OF PROPRIETARY PROPERTY:
THE INFORMATION CONTAINED HEREIN IS THE PROPRIETARY PROPERTY OF APPLE INC.
THE POSESSOR AGREES TO THE FOLLOWING:
I TO MAINTAIN THIS DOCUMENT IN CONFIDENCE
II NOT TO REPRODUCE OR COPY IT
III NOT TO REVEAL OR PUBLISH IT IN WHOLE OR PART
IV ALL RIGHTS RESERVED

www.haojiyoubbs.com
QQ微信：181806465

3V3 G3H RTC VR HIGH SIDE

63 49 PPVIN_G3H_P3V3G3HRTC
- CD700 12PF 5% 25V NP0-C0G 0201
- CD701 3.0PF +/-0.1PF 25V NP0-C0G 0201

3V3 G3H RTC VR

63 PP3V3_G3H_RTC_REG_R
- CD710 12PF 5% 25V NP0-C0G 0201
- CD711 3.0PF +/-0.1PF 25V NP0-C0G 0201

DCIN CHARGER

83 64 49 27 PPDCIN_G3H
- CD720 12PF 5% 25V NP0-C0G 0201
- CD721 3.0PF +/-0.1PF 25V NP0-C0G 0201

DCIN XA ACE2

28 27 PPDCIN_XA_G3H_F
- CD730 12PF 5% 25V NP0-C0G 0201
- CD731 3.0PF +/-0.1PF 25V NP0-C0G 0201

DCIN XB ACE2

29 27 PPDCIN_XB_G3H_F
- CD740 12PF 5% 25V NP0-C0G 0201
- CD741 3.0PF +/-0.1PF 25V NP0-C0G 0201

PBUS CHARGER

87 86 83 75 72 64 62 49 PPBUS_G3H
- CD750 12PF 5% 25V NP0-C0G 0201
- CD751 3.0PF +/-0.1PF 25V NP0-C0G 0201

PBUS CPU HIGH SIDE SENSOR

87 86 83 75 72 64 62 49 PPBUS_G3H
- CD760 12PF 5% 25V NP0-C0G 0201
- CD761 3.0PF +/-0.1PF 25V NP0-C0G 0201

PBUS RIGHT AMP SENSOR

87 86 83 75 72 64 62 49 PPBUS_G3H
- CD770 12PF 5% 25V NP0-C0G 0201
- CD771 3.0PF +/-0.1PF 25V NP0-C0G 0201

PBUS LEFT AMP SENSOR

87 86 83 75 72 64 62 49 PPBUS_G3H
- CD7K0 12PF 5% 25V NP0-C0G 0201
- CD7K1 3.0PF +/-0.1PF 25V NP0-C0G 0201

PBUS TRACKPAD

87 86 83 75 72 64 62 49 PPBUS_G3H
- CD7M0 12PF 5% 25V NP0-C0G 0201
- CD7M1 3.0PF +/-0.1PF 25V NP0-C0G 0201

5V G3S TRACKPAD

62 54 PP5V_G3S_TPAD
- CD7L0 12PF 5% 25V NP0-C0G 0201
- CD7L1 3.0PF +/-0.1PF 25V NP0-C0G 0201

CPU CORE VR LOAD SIDE

83 66 50 9 7 PPVCC_S0_CPU
- CD7B0 12PF 5% 25V NP0-C0G 0201
- CD7B1 12PF 5% 25V NP0-C0G 0201
- CD7B2 12PF 5% 25V NP0-C0G 0201
- CD7B3 12PF 5% 25V NP0-C0G 0201
- CD7B4 12PF 5% 25V NP0-C0G 0201
- CD7B5 12PF 5% 25V NP0-C0G 0201
- CD7B6 12PF 5% 25V NP0-C0G 0201
- CD7J0 3.0PF +/-0.1PF 25V NP0-C0G 0201
- CD7J1 3.0PF +/-0.1PF 25V NP0-C0G 0201
- CD7J2 3.0PF +/-0.1PF 25V NP0-C0G 0201
- CD7J3 3.0PF +/-0.1PF 25V NP0-C0G 0201
- CD7J4 3.0PF +/-0.1PF 25V NP0-C0G 0201
- CD7J5 3.0PF +/-0.1PF 25V NP0-C0G 0201
- CD7J6 3.0PF +/-0.1PF 25V NP0-C0G 0201

CPU VCCSA LOAD SIDE

83 66 52 9 7 PPVCCSA_S0_CPU
- CD7C0 12PF 5% 25V NP0-C0G 0201
- CD7C2 12PF 5% 25V NP0-C0G 0201
- CD7C3 12PF 5% 25V NP0-C0G 0201
- CD7C1 3.0PF +/-0.1PF 25V NP0-C0G 0201
- CD7C4 3.0PF +/-0.1PF 25V NP0-C0G 0201
- CD7C5 3.0PF +/-0.1PF 25V NP0-C0G 0201

CPU VCCGT LOAD SIDE

83 67 50 10 7 PPVCCGT_S0_CPU
- CD7D0 12PF 5% 25V NP0-C0G 0201
- CD7D1 12PF 5% 25V NP0-C0G 0201
- CD7D2 12PF 5% 25V NP0-C0G 0201
- CD7D3 12PF 5% 25V NP0-C0G 0201
- CD7D4 12PF 5% 25V NP0-C0G 0201
- CD7D5 12PF 5% 25V NP0-C0G 0201
- CD7D8 12PF 5% 25V NP0-C0G 0201
- CD7V0 3.0PF +/-0.1PF 25V NP0-C0G 0201
- CD7V1 3.0PF +/-0.1PF 25V NP0-C0G 0201
- CD7V2 3.0PF +/-0.1PF 25V NP0-C0G 0201
- CD7V3 3.0PF +/-0.1PF 25V NP0-C0G 0201
- CD7V4 3.0PF +/-0.1PF 25V NP0-C0G 0201
- CD7V5 3.0PF +/-0.1PF 25V NP0-C0G 0201
- CD7V8 3.0PF +/-0.1PF 25V NP0-C0G 0201

CPU VCCIO LOAD SIDE

83 73 9 7 4 PPVCCIO_S0_CPU
- CD780 12PF 5% 25V NP0-C0G 0201
- CD781 3.0PF +/-0.1PF 25V NP0-C0G 0201

VBUS XB

83 30 29 PP20V_USBC_XB_VBUS
- CD7E0 12PF 5% 25V NP0-C0G 0201
- CD7E1 12PF 5% 25V NP0-C0G 0201
- CD7E2 12PF 5% 25V NP0-C0G 0201
- CD7E3 12PF 5% 25V NP0-C0G 0201
- CD7E4 3.0PF +/-0.1PF 25V NP0-C0G 0201
- CD7E5 3.0PF +/-0.1PF 25V NP0-C0G 0201

VBUS XA

83 30 28 27 PP20V_USBC_XA_VBUS
- CD7F0 12PF 5% 25V NP0-C0G 0201
- CD7F4 3.0PF +/-0.1PF 25V NP0-C0G 0201

DFR 1V8 VR

83 48 46 PP1V8_DFR
- CD790 3.0PF +/-0.1PF 25V NP0-C0G 0201
- CD791 3.0PF +/-0.1PF 25V NP0-C0G 0201

CPU CORE/VCCSA/GT VR HIGH SIDE

85 73 69 67 66 65 49 43 PPBUS_HS_CPU
- CD7A0 12PF 5% 25V NP0-C0G 0201
- CD7A1 12PF 5% 25V NP0-C0G 0201
- CD7A2 12PF 5% 25V NP0-C0G 0201
- CD7A3 12PF 5% 25V NP0-C0G 0201
- CD7A4 12PF 5% 25V NP0-C0G 0201
- CD7A5 12PF 5% 25V NP0-C0G 0201
- CD7A6 12PF 5% 25V NP0-C0G 0201
- CD7A7 12PF 5% 25V NP0-C0G 0201
- CD7A8 12PF 5% 25V NP0-C0G 0201
- CD7A9 12PF 5% 25V NP0-C0G 0201
- CD7G1 12PF 5% 25V NP0-C0G 0201
- CD7G2 12PF 5% 25V NP0-C0G 0201
- CD7G3 12PF 5% 25V NP0-C0G 0201
- CD7G4 12PF 5% 25V NP0-C0G 0201
- CD7G5 12PF 5% 25V NP0-C0G 0201
- CD7H0 3.0PF +/-0.1PF 25V NP0-C0G 0201
- CD7H1 3.0PF +/-0.1PF 25V NP0-C0G 0201
- CD7H2 3.0PF +/-0.1PF 25V NP0-C0G 0201
- CD7H3 3.0PF +/-0.1PF 25V NP0-C0G 0201
- CD7H4 3.0PF +/-0.1PF 25V NP0-C0G 0201
- CD7H5 3.0PF +/-0.1PF 25V NP0-C0G 0201
- CD7H6 3.0PF +/-0.1PF 25V NP0-C0G 0201
- CD7H7 3.0PF +/-0.1PF 25V NP0-C0G 0201
- CD7H8 3.0PF +/-0.1PF 25V NP0-C0G 0201
- CD7H9 3.0PF +/-0.1PF 25V NP0-C0G 0201
- CD7I1 3.0PF +/-0.1PF 25V NP0-C0G 0201
- CD7I2 3.0PF +/-0.1PF 25V NP0-C0G 0201
- CD7I3 3.0PF +/-0.1PF 25V NP0-C0G 0201
- CD7I4 3.0PF +/-0.1PF 25V NP0-C0G 0201
- CD7I5 3.0PF +/-0.1PF 25V NP0-C0G 0201

BOM_COST_GROUP=DESENSE

SYNC_MASTER= SYNC_DATE=

PAGE TITLE: DESENSE 3

Apple Inc.

DRAWING NUMBER: 051-05309 SIZE: D

REVISION: 5.1.0

BRANCH

PAGE: 137 OF 500

SHEET: 87 OF 98

NOTICE OF PROPRIETARY PROPERTY:
THE INFORMATION CONTAINED HEREIN IS THE PROPRIETARY PROPERTY OF APPLE INC.
THE POSESSOR AGREES TO THE FOLLOWING:
I TO MAINTAIN THIS DOCUMENT IN CONFIDENCE
II NOT TO REPRODUCE OR COPY IT
III NOT TO REVEAL OR PUBLISH IT IN WHOLE OR PART
IV ALL RIGHTS RESERVED

www.haojiyoubbs.com
QQ微信：181806465

MEM 1V2 LOAD SIDE

73 50 23 22 21 20 19 83 74 PP1V2_S3

CD800 12PF 5% 25V NP0-C0G 0201
CD801 12PF 5% 25V NP0-C0G 0201
CD802 12PF 5% 25V NP0-C0G 0201
CD803 12PF 5% 25V NP0-C0G 0201
CD804 12PF 5% 25V NP0-C0G 0201
CD805 12PF 5% 25V NP0-C0G 0201
CD806 12PF 5% 25V NP0-C0G 0201
CD807 12PF 5% 25V NP0-C0G 0201
CD808 12PF 5% 25V NP0-C0G 0201
CD809 12PF 5% 25V NP0-C0G 0201
CD810 12PF 5% 25V NP0-C0G 0201
CD811 12PF 5% 25V NP0-C0G 0201
CD812 12PF 5% 25V NP0-C0G 0201
CD813 12PF 5% 25V NP0-C0G 0201
CD814 12PF 5% 25V NP0-C0G 0201
CD815 12PF 5% 25V NP0-C0G 0201
CD816 12PF 5% 25V NP0-C0G 0201
CD817 12PF 5% 25V NP0-C0G 0201
CD818 12PF 5% 25V NP0-C0G 0201
CD819 12PF 5% 25V NP0-C0G 0201
CD820 12PF 5% 25V NP0-C0G 0201
CD821 12PF 5% 25V NP0-C0G 0201
CD822 12PF 5% 25V NP0-C0G 0201
CD823 12PF 5% 25V NP0-C0G 0201
CD824 12PF 5% 25V NP0-C0G 0201
CD825 12PF 5% 25V NP0-C0G 0201
CD827 12PF 5% 25V NP0-C0G 0201
CD828 12PF 5% 25V NP0-C0G 0201
CD832 3.0PF +/-0.1PF 25V NP0-C0G 0201
CD833 3.0PF +/-0.1PF 25V NP0-C0G 0201
CD834 3.0PF +/-0.1PF 25V NP0-C0G 0201
CD835 3.0PF +/-0.1PF 25V NP0-C0G 0201
CD836 3.0PF +/-0.1PF 25V NP0-C0G 0201
CD837 3.0PF +/-0.1PF 25V NP0-C0G 0201
CD838 3.0PF +/-0.1PF 25V NP0-C0G 0201
CD839 3.0PF +/-0.1PF 25V NP0-C0G 0201
CD840 3.0PF +/-0.1PF 25V NP0-C0G 0201
CD841 3.0PF +/-0.1PF 25V NP0-C0G 0201
CD842 3.0PF +/-0.1PF 25V NP0-C0G 0201
CD843 3.0PF +/-0.1PF 25V NP0-C0G 0201
CD844 3.0PF +/-0.1PF 25V NP0-C0G 0201
CD845 3.0PF +/-0.1PF 25V NP0-C0G 0201
CD846 3.0PF +/-0.1PF 25V NP0-C0G 0201
CD847 3.0PF +/-0.1PF 25V NP0-C0G 0201
CD848 3.0PF +/-0.1PF 25V NP0-C0G 0201
CD849 3.0PF +/-0.1PF 25V NP0-C0G 0201
CD850 3.0PF +/-0.1PF 25V NP0-C0G 0201
CD851 3.0PF +/-0.1PF 25V NP0-C0G 0201
CD852 3.0PF +/-0.1PF 25V NP0-C0G 0201
CD853 3.0PF +/-0.1PF 25V NP0-C0G 0201
CD854 3.0PF +/-0.1PF 25V NP0-C0G 0201
CD855 3.0PF +/-0.1PF 25V NP0-C0G 0201
CD856 3.0PF +/-0.1PF 25V NP0-C0G 0201
CD857 3.0PF +/-0.1PF 25V NP0-C0G 0201
CD859 3.0PF +/-0.1PF 25V NP0-C0G 0201
CD860 3.0PF +/-0.1PF 25V NP0-C0G 0201
CD861 3.0PF +/-0.1PF 25V NP0-C0G 0201
CD862 3.0PF +/-0.1PF 25V NP0-C0G 0201
CD863 3.0PF +/-0.1PF 25V NP0-C0G 0201
CD864 3.0PF +/-0.1PF 25V NP0-C0G 0201
CD865 3.0PF +/-0.1PF 25V NP0-C0G 0201
CD866 3.0PF +/-0.1PF 25V NP0-C0G 0201
CD867 3.0PF +/-0.1PF 25V NP0-C0G 0201

MEM 1V8 LOAD SIDE

83 51 23 22 21 20 PP1V8_S3_MEM

CD870 12PF 5% 25V NP0-C0G 0201
CD871 12PF 5% 25V NP0-C0G 0201
CD872 12PF 5% 25V NP0-C0G 0201
CD873 12PF 5% 25V NP0-C0G 0201
CD874 12PF 5% 25V NP0-C0G 0201
CD875 12PF 5% 25V NP0-C0G 0201
CD876 12PF 5% 25V NP0-C0G 0201
CD877 12PF 5% 25V NP0-C0G 0201
CD880 3.0PF +/-0.1PF 25V NP0-C0G 0201
CD881 3.0PF +/-0.1PF 25V NP0-C0G 0201
CD882 3.0PF +/-0.1PF 25V NP0-C0G 0201
CD883 3.0PF +/-0.1PF 25V NP0-C0G 0201
CD884 3.0PF +/-0.1PF 25V NP0-C0G 0201
CD885 3.0PF +/-0.1PF 25V NP0-C0G 0201
CD886 3.0PF +/-0.1PF 25V NP0-C0G 0201
CD887 3.0PF +/-0.1PF 25V NP0-C0G 0201

MEM 0V6 DDRVTT LOAD SIDE

83 73 24 PP0V6_S0_DDRVTT

CD890 12PF 5% 25V NP0-C0G 0201
CD891 12PF 5% 25V NP0-C0G 0201
CD892 12PF 5% 25V NP0-C0G 0201
CD893 12PF 5% 25V NP0-C0G 0201
CD894 12PF 5% 25V NP0-C0G 0201
CD895 12PF 5% 25V NP0-C0G 0201
CD896 12PF 5% 25V NP0-C0G 0201
CD897 12PF 5% 25V NP0-C0G 0201
CD8A0 3.0PF +/-0.1PF 25V NP0-C0G 0201
CD8A1 3.0PF +/-0.1PF 25V NP0-C0G 0201
CD8A2 3.0PF +/-0.1PF 25V NP0-C0G 0201
CD8A3 3.0PF +/-0.1PF 25V NP0-C0G 0201
CD8A4 3.0PF +/-0.1PF 25V NP0-C0G 0201
CD8A5 3.0PF +/-0.1PF 25V NP0-C0G 0201
CD8A6 3.0PF +/-0.1PF 25V NP0-C0G 0201
CD8A7 3.0PF +/-0.1PF 25V NP0-C0G 0201

CPU 1V2 LOAD SIDE

83 50 9 7 6 PP1V2_S3_CPUDDR

CD8B0 12PF 5% 25V NP0-C0G 0201
CD8B1 12PF 5% 25V NP0-C0G 0201
CD8B2 12PF 5% 25V NP0-C0G 0201
CD8B3 12PF 5% 25V NP0-C0G 0201
CD8C0 3.0PF +/-0.1PF 25V NP0-C0G 0201
CD8C1 3.0PF +/-0.1PF 25V NP0-C0G 0201
CD8C2 3.0PF +/-0.1PF 25V NP0-C0G 0201
CD8C3 3.0PF +/-0.1PF 25V NP0-C0G 0201

TBT X SVR

26 PP0V9_TBT_X_SVR

CD8H0 12PF 5% 25V NP0-C0G 0201
CD8H1 3.0PF +/-0.1PF 25V NP0-C0G 0201

TBT X S0

51 27 26 PP3V3_TBT_X_S0

CD8D0 12PF 5% 25V NP0-C0G 0201
CD8D1 12PF 5% 25V NP0-C0G 0201
CD8D2 3.0PF +/-0.1PF 25V NP0-C0G 0201
CD8D3 3.0PF +/-0.1PF 25V NP0-C0G 0201

EDP CONNECTOR 5V LCD

83 76 PP5V_S0SW_LCD

CD8E0 12PF 5% 25V NP0-C0G 0201
CD8E1 3.0PF +/-0.1PF 25V NP0-C0G 0201

EDP CONNECTOR 5V ALS

76 PP5V_G3S_ALSCAM

CD8F0 12PF 5% 25V NP0-C0G 0201
CD8F1 3.0PF +/-0.1PF 25V NP0-C0G 0201

EDP CONNECTOR 3V3 LCD

83 76 47 PP3V3_S0SW_LCD

CD8G0 12PF 5% 25V NP0-C0G 0201
CD8G1 3.0PF +/-0.1PF 25V NP0-C0G 0201

BOM_COST_GROUP=DESENSE

SYNC_MASTER=	SYNC_DATE=
PAGE TITLE	DESENSE 4
Apple Inc.	DRAWING NUMBER 051-05309 SIZE D
	REVISION 5.1.0
	BRANCH
	PAGE 138 OF 500
	SHEET 88 OF 98

NOTICE OF PROPRIETARY PROPERTY:
THE INFORMATION CONTAINED HEREIN IS THE PROPRIETARY PROPERTY OF APPLE INC.
THE POSESSOR AGREES TO THE FOLLOWING:
I TO MAINTAIN THIS DOCUMENT IN CONFIDENCE
II NOT TO REPRODUCE OR COPY IT
III NOT TO REVEAL OR PUBLISH IT IN WHOLE OR PART
IV ALL RIGHTS RESERVED

www.haojiyoubbs.com
QQ微信：181806465

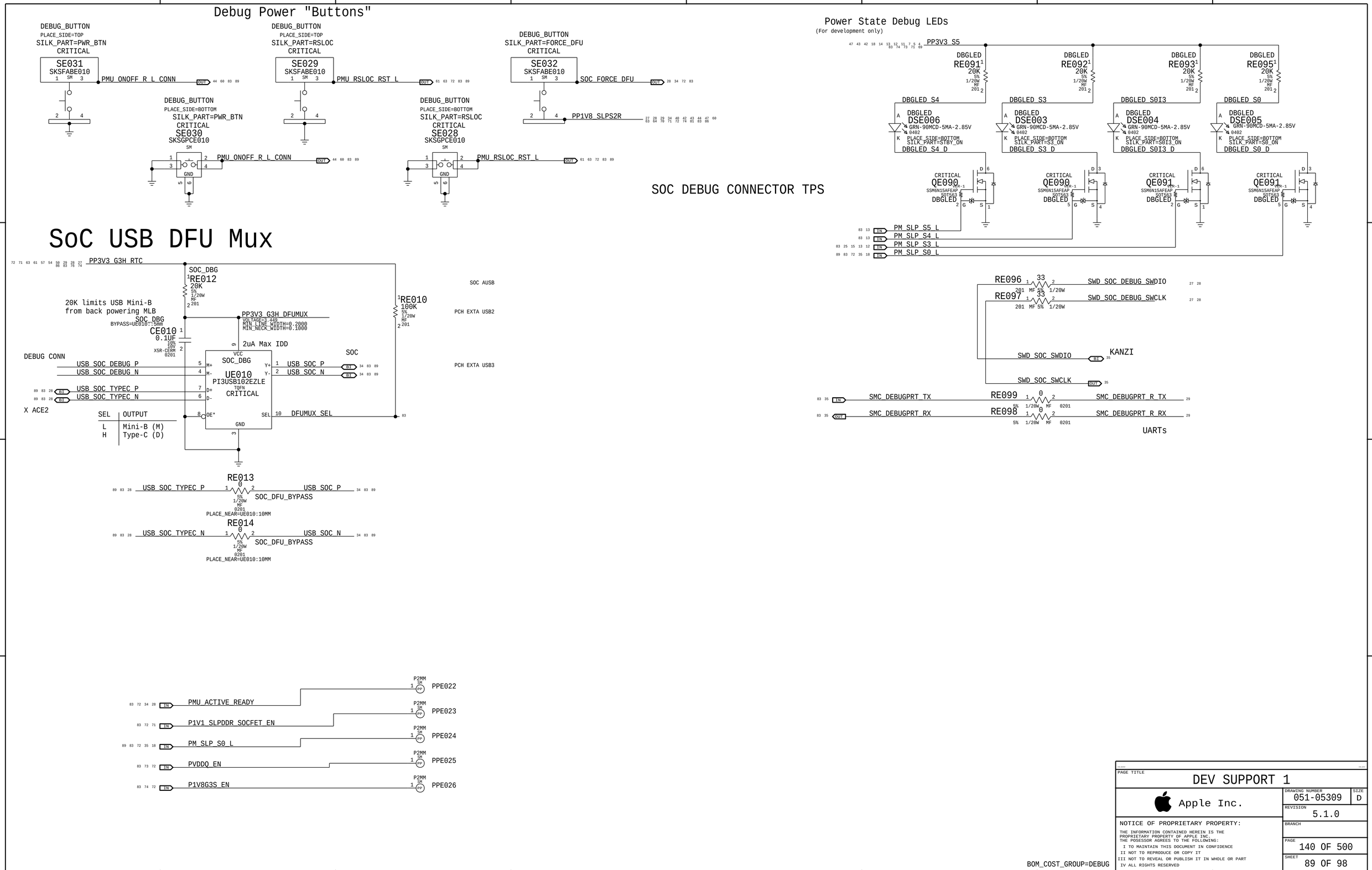

www.haojiyoubbs.com
QQ微信：181806465

UE020 SAK Truth Table:

INPUTS					OUTPUTS (OD)			
PMU_ACT_RDY	SLP_SCFET_EN	SLP_S0_L	VDDQ_EN	1V8G3S_EN	R	G	B	COLOR
0	0	0	0	0	BLINK	1	1	Blinking Red
0	0	0	0	1	0	1	1	Red
0	0	0	1	0	0	1	0	Magenta
0	0	0	1	1	0	0	0	White
0	0	1	0	0	0	1	0	Magenta
0	0	1	0	1	0	1	0	Magenta
0	0	1	1	0	0	1	0	Magenta
0	0	1	1	1	0	1	0	Magenta
0	1	0	0	0	0	1	0	Magenta
0	1	0	0	1	0	1	0	Magenta
0	1	0	1	0	0	1	0	Magenta
0	1	0	1	1	0	1	0	Magenta
0	1	1	0	0	0	1	0	Magenta
0	1	1	0	1	0	1	0	Magenta
0	1	1	1	0	0	1	0	Magenta
0	1	1	1	1	0	1	0	Magenta
1	0	0	0	0	0	1	0	Magenta
1	0	0	0	1	0	1	0	Magenta
1	0	0	1	0	0	1	0	Magenta
1	0	0	1	1	0	1	0	Magenta
1	0	1	0	0	0	1	0	Magenta
1	0	1	0	1	0	1	0	Magenta
1	0	1	1	0	0	1	0	Magenta
1	0	1	1	1	0	1	0	Magenta
1	1	0	0	0	BLINK	0	1	Blinking Green & Yellow
1	1	0	0	1	0	0	1	Yellow
1	1	0	1	0	0	1	0	Magenta
1	1	0	1	1	1	1	0	Blue
1	1	1	0	0	0	1	0	Magenta
1	1	1	0	1	0	1	0	Magenta
1	1	1	1	0	0	1	0	Magenta
1	1	1	1	1	1	0	1	Green

BOM_COST_GROUP=DEBUG

SYNC_MASTER= SYNC_DATE=

PAGE TITLE

DEV SUPPORT 2

Apple Inc.

DRAWING NUMBER 051-05309

SIZE D

REVISION 5.1.0

BRANCH

PAGE 141 OF 500

SHEET 90 OF 98

NOTICE OF PROPRIETARY PROPERTY:

THE INFORMATION CONTAINED HEREIN IS THE PROPRIETARY PROPERTY OF APPLE INC.
THE POSESSOR AGREES TO THE FOLLOWING:
I TO MAINTAIN THIS DOCUMENT IN CONFIDENCE
II NOT TO REPRODUCE OR COPY IT
III NOT TO REVEAL OR PUBLISH IT IN WHOLE OR PART
IV ALL RIGHTS RESERVED

www.haojiyoubbs.com
QQ微信：181806465

CPU

PART NUMBER	QTY	DESCRIPTION	REFERENCE DES	CRITICAL	BOM OPTION
337S00574	1	CPU,CFLU,SRCUU,QS,D0,2.3,28W,1.05,BGA1528	U0500	CRITICAL	CPU:28W_2P3G_SRCUU
337S00572	1	CPU,CFLU,SRCK5,QS,D0,2.7,28W,1.2,BGA1528	U0500	CRITICAL	CPU:28W_2P7G_SRCK5
337S00693	1	CPU,CFLU,QRH7,QS,D0,1.4,1.05,BGA1528	U0500	CRITICAL	CPU:15W_1P4G_QRH7
337S00692	1	CPU,CFLU,QRH6,QS,D0,1.7,1.15,BGA1528	U0500	CRITICAL	CPU:15W_1P7G_QRH6
337S00717	1	CPU,CFLU,SREZ2,PRQ,D0,1.4,4C,1.05,BGA1528	U0500	CRITICAL	CPU:15W_1P4G_SREZ2
337S00716	1	CPU,CFLU,SREZ1,PRQ,D0,1.7,4C,1.15,BGA1528	U0500	CRITICAL	CPU:15W_1P7G_SREZ1

SOC

PART NUMBER	QTY	DESCRIPTION	REFERENCE DES	CRITICAL	BOM OPTION
339S00386	1	POP,GIBRALTAR+1GB 20NM,M,DEV,SCK,CSP1122	U3900	CRITICAL	SOC:DEV_1G
339S00388	1	POP,GIBRALTAR+2GB 20NM,M,DEV,SCK,CSP1122	U3900	CRITICAL	SOC:DEV_2G
339S00601	1	POP,GIBRALTAR_L+1GB 16NM,M,B0,SCK,C1122	U3900	CRITICAL	SOC:PROD_B0_1G
339S00605	1	POP,GIBRALTAR_L+2GB 16NM,M,B0,SCK,C1122	U3900	CRITICAL	SOC:PROD_B0_2G

AMR ASSEMBLY

PART NUMBER	QTY	DESCRIPTION	REFERENCE DES	CRITICAL	BOM OPTION
677-19902	1	SUBASSY (T&R) PCBA,AMR INTERPOSER,X941	J4800	CRITICAL	AMR:POC

TBT

PART NUMBER	QTY	DESCRIPTION	REFERENCE DES	CRITICAL	BOM OPTION
338S00441	1	IC,TBT,TITAN RIDGE DP,SLMHS,PRQ,C1,CSP337	U2800	CRITICAL	TBT:TR_C1_PRQ

UPC

PART NUMBER	QTY	DESCRIPTION	REFERENCE DES	CRITICAL	BOM OPTION
353S02158	4	IC,CD3217,ACE2,B2,USB PWR SW W/HV,BGA123	U3100,U3200	CRITICAL	UPC:ACE2_B2

WIRELESS

PART NUMBER	QTY	DESCRIPTION	REFERENCE DES	CRITICAL	BOM OPTION
339S00586	1	MODULE,WIFI/BT,SAPPORO,ES2.1,M,LGA451	U3701	CRITICAL	MODULE:MUR__ES_2P1
339S00599	1	MODULE,WIFI/BT,SAPPORO,ES23,M,LGA451	U3701	CRITICAL	MODULE:MUR_ES_2P3
339S00616	1	MODULE,WIFI/BT,SAPPORO,ES3.1,M,LGA451	U3701	CRITICAL	MODULE:MUR_ES_3P1
339S00628	1	MODULE,WIFI/BT,SAPPORO,ES2.3,U,LGA451	U3701	CRITICAL	MODULE:USI_ES_2P3
339S00632	1	MODULE,WIFI/BT,SAPPORO,ES3.1,U,LGA451	U3701	CRITICAL	MODULE:USI_ES_3P1

PMU

PART NUMBER	QTY	DESCRIPTION	REFERENCE DES	CRITICAL	BOM OPTION
338S00466	1	IC,PMU,CALPE-L,D2249A0,OTP-BC,CSP324	U7800	CRITICAL	CALPE_L:OTP_BC

CHARGER IC

PART NUMBER	QTY	DESCRIPTION	REFERENCE DES	CRITICAL	BOM OPTION
353S01525	1	IC,ISL9240HIB0Z,PMU,SUONA,WCSP40,2.1X3.3	U7000	CRITICAL	CHARGER_IC:POC

DRAM

PART NUMBER	QTY	DESCRIPTION	REFERENCE DES	CRITICAL	BOM OPTION
333S00125	4	IC,SDRAM,LPDDR3-2133,16GBIT,21NM,H,BGA178	U2300,U2400,U2500,U2600	CRITICAL	DRAM:08GB_HY
333S00246	4	IC,SDRAM,LPDDR3-2133,16GBIT,18NM,BGA178	U2300,U2400,U2500,U2600	CRITICAL	DRAM:08GB_SS_D
333S00126	4	IC,SDRAM,LPDDR3-2133,32GBIT,21NM,H,BGA178	U2300,U2400,U2500,U2600	CRITICAL	DRAM:16GB_HY
333S00247	4	IC,SDRAM,LPDDR3-2133,32GBIT,18NM,BGA178	U2300,U2400,U2500,U2600	CRITICAL	DRAM:16GB_SS_D

SE

PART NUMBER	QTY	DESCRIPTION	REFERENCE DES	CRITICAL	BOM OPTION
998-15216	1	IC,SN100V,VENUS,DEV KEY,B2,S/W-M,WLCSP72	U5001	CRITICAL	SE:DEV_2019
338S00445	1	IC,SN100V,VENUS,PROD KEY,B2,SW-N,WLCSP72	U5001	CRITICAL	SE:PROD_2019

OCARINA

PART NUMBER	QTY	DESCRIPTION	REFERENCE DES	CRITICAL	BOM OPTION
338S00410	1	IC,PMU,OCARINA,D2499A0,OTP-AG,WLCSP56	U9000	CRITICAL	SSD:4L

VR INDUCTOR VCCSA

PART NUMBER	QTY	DESCRIPTION	REFERENCE DES	CRITICAL	BOM OPTION
152S00689	1	IND,MLD,0.47UH,4.7MO,17.5A,5.6X5.2X2.4MM	L7270	CRITICAL	IND_VCCSA:CYNTEC

BACKLIGHT VOUT FILTER

PART NUMBER	QTY	DESCRIPTION	REFERENCE DES	CRITICAL	BOM OPTION
116S00006	1	RES,MTL FILM,0 OHM,TIGHT TOL,3A,0402	L8420	CRITICAL	BKLT_FILT:ZERO_OHM

USBC AARDVARKANOID

PART NUMBER	QTY	DESCRIPTION	REFERENCE DES	CRITICAL	BOM OPTION
516S00115	1	CONN,PLUG,B2B,12+2P,P=0.35MM,H=0.6MM	J3002	CRITICAL	USBC_AARDVARKANOID

TBT ROM

PART NUMBER	QTY	DESCRIPTION	REFERENCE DES	CRITICAL	BOM OPTION
341S01553	1	ROM,BBR/ACE(V48.2) PROTO-1-B,X1782	U2890	CRITICAL	TBT_ROM:P1B
341S01591	1	ROM,BBR/ACE(V41.13) EVT,X1782	U2890	CRITICAL	TBT_ROM:EVT

BT ROM

PART NUMBER	QTY	DESCRIPTION	REFERENCE DES	CRITICAL	BOM OPTION
335S00348	1	IC,SPI SERIAL FLASH,4M BIT,1.8V,USON8	U3750	CRITICAL	BT_ROM:BLANK_WINBOND
335S00400	1	IC,SPI SERIAL FLASH,4M BIT,1.8V,USON8	U3750	CRITICAL	BT_ROM:BLANK_MACRONIX
341S01184	1	BT SFLASH ROM (V2) PROTO-0,X1536	U3750	CRITICAL	BT_ROM:P0
341S01260	1	ROM,BT SFLASH (VXX) PROTO-1,X1536	U3750	CRITICAL	BT_ROM:P1

WIFI ROM

PART NUMBER	QTY	DESCRIPTION	REFERENCE DES	CRITICAL	BOM OPTION
335S00214	1	IC,EEPROM,SER,UWIRE,16K,1.8V,DFN8	U3710	CRITICAL	WIFI_ROM:BLANK_ON
335S00216	1	IC,EEPROM,SER,UWIRE,16K,1.8V,DFN8	U3710	CRITICAL	WIFI_ROM:BLANK_ROHM
341S01087	1	IC,WIFI ROM (V1) WW1,X1536	U3710	CRITICAL	WIFI_ROM:V00
341S01394	1	ROM,WIFI (VXX) (NEW FOR DVT) WW1,X1536	U3710	CRITICAL	WIFI_ROM:DVT

SPEAKER AMP

PART NUMBER	QTY	DESCRIPTION	REFERENCE DES	CRITICAL	BOM OPTION
353S01629	4	IC,TAS5770L,B2,CLASS D AMP,CSP30	U6400,U6450,U6500,U6550	CRITICAL	SPEAKER_AMP:B2
353S01871	4	IC,TAS5770L,C0,CLASS D AMP,CSP30	U6400,U6450,U6500,U6550	CRITICAL	SPEAKER_AMP:C0

VR DRIVER CPU CORE

PART NUMBER	QTY	DESCRIPTION	REFERENCE DES	CRITICAL	BOM OPTION
353S00519	2	IC,SIC621,DR MOS,IMVP-8,60A,PQFN31,5X5MM	U7210,U7220	CRITICAL	DR_MOS_CORE:VISHAY

VR DRIVER CPU VCCSA

PART NUMBER	QTY	DESCRIPTION	REFERENCE DES	CRITICAL	BOM OPTION
353S00525	1	IC,SIC532,DR MOS,IMVP-8,30A,PQFN22,45X35	U7270	CRITICAL	DR_MOS_VCCSA:VISHAY

VR DRIVER CPU GT

PART NUMBER	QTY	DESCRIPTION	REFERENCE DES	CRITICAL	BOM OPTION
353S00519	2	IC,SIC621,DR MOS,IMVP-8,60A,PQFN31,5X5MM	U7410,U7420	CRITICAL	DR_MOS_GT:VISHAY

SYNC_MASTER= SYNC_DATE=

PAGE TITLE

BOM CONFIGURATION

Apple Inc.

DRAWING NUMBER 051-05309 SIZE D

REVISION 5.1.0

BRANCH

PAGE 400 OF 500

SHEET 91 OF 98

NOTICE OF PROPRIETARY PROPERTY:
THE INFORMATION CONTAINED HEREIN IS THE PROPRIETARY PROPERTY OF APPLE INC.
THE POSESSOR AGREES TO THE FOLLOWING:
I TO MAINTAIN THIS DOCUMENT IN CONFIDENCE
II NOT TO REPRODUCE OR COPY IT
III NOT TO REVEAL OR PUBLISH IT IN WHOLE OR PART
IV ALL RIGHTS RESERVED

www.haojiyoubbs.com
QQ微信：181806465

NAND U8600

PART NUMBER	QTY	DESCRIPTION	REFERENCE DES	CRITICAL	BOM OPTION
335S00377	1	NAND,3DV4,64GBT,S4E,256G,H,SLGA110	U8600	CRITICAL	NAND_U8600:2DP_HY
335S00393	1	NAND,3DV4,64GBT,XXX,S4E,256G,H,SLGA110	U8600	CRITICAL	NAND_U8600:2DP_TS
335S00388	1	NAND,3DV4,64GBT,XXX,S4E,256G,SD,SLGA110	U8600	CRITICAL	NAND_U8600:2DP_WD
335S00416	1	NAND,3DV5,64GBT,S4E,256G,SS,SLGA110	U8600	CRITICAL	NAND_U8600:2DP_SS
335T00001	1	NAND,3DV5,64GBT,XXX,S4E,256G,T,SLGA110	U8600	CRITICAL	NAND_U8600:2DP_TS_SLT
335T00017	1	NAND,3DV5,64GBT,S4E,256G,H,SLGA110	U8600	CRITICAL	NAND_U8600:2DP_HY_SLT
335T00008	1	NAND,3DV5,64GBT,S4E,256G,SS,SLGA110	U8600	CRITICAL	NAND_U8600:2DP_SS_SLT
335S00394	1	NAND,3DV4,128GBT,XXX,256G,T,SLGA110	U8600	CRITICAL	NAND_U8600:4DP_TS
335S00378	1	NAND,3DV4,128GBT,S4E,256G,H,SLGA110	U8600	CRITICAL	NAND_U8600:4DP_HY
335S00424	1	NAND,3DV5,128GBT,S4E,256G,SS,SLGA110	U8600	CRITICAL	NAND_U8600:4DP_SS
335T00002	1	NAND,3DV4,128GBT,XXX,S4E,256G,T,SLGA110	U8600	CRITICAL	NAND_U8600:4DP_TS_SLT
335T00018	1	NAND,3DV4,128GBT,S4E,256G,H,SLGA110	U8600	CRITICAL	NAND_U8600:4DP_HY_SLT
335T00009	1	NAND,3DV5,128GBT,S4E,256G,SS,SLGA110	U8600	CRITICAL	NAND_U8600:4DP_SS_SLT
335S00398	1	NAND,3DV4,192GBT,XXX,S4E,256G,H,SLGA110	U8600	CRITICAL	NAND_U8600:6DP_HY
335S00395	1	NAND,3DV4,192GBT,XXX,S4E,256G,T,SLGA110	U8600	CRITICAL	NAND_U8600:6DP_TS
335T00005	1	NAND,3DV4,192GBT,XXX,S4E,256G,T,SLGA110	U8600	CRITICAL	NAND_U8600:6DP_TS_SLT
335T00019	1	NAND,3DV4,192GBT,XXX,S4E,256G,H,SLGA110	U8600	CRITICAL	NAND_U8600:6DP_HY_SLT
335S00379	1	NAND,3DV4,256GBT,S4E,256G,H,SLGA110	U8600	CRITICAL	NAND_U8600:8DP_HY
335S00327	1	NAND,3DV3,256GBP,133,S4E,170G,SD,ULGA110	U8600	CRITICAL	NAND_U8600:8DP_WD
335S00396	1	NAND,3DV4,256GBT,XXX,S4E,256G,T,SLGA110	U8600	CRITICAL	NAND_U8600:8DP_TS
335T00006	1	NAND,3DV4,256GBT,XXX,S4E,256G,T,SLGA110	U8600	CRITICAL	NAND_U8600:8DP_TS_SLT
335T00020	1	NAND,3DV4,256GBT,S4E,256G,H,SLGA110	U8600	CRITICAL	NAND_U8600:8DP_HY_SLT
335S00399	1	NAND,3DV4,320GBT,XXX,S4E,256G,H,SLGA110	U8600	CRITICAL	NAND_U8600:10DP_HY
335S00397	1	NAND,3DV4,320GBT,XXX,S4E,256G,T,SLGA110	U8600	CRITICAL	NAND_U8600:10DP_TS
335T00021	1	NAND,3DV4,320GBT,XXX,S4E,256G,H,SLGA110	U8600	CRITICAL	NAND_U8600:10DP_HY_SLT
335T00007	1	NAND,3DV4,320GBT,XXX,S4E,256G,T,SLGA110	U8600	CRITICAL	NAND_U8600:10DP_TS_SLT
335S00380	1	NAND,3DV4,512GBT,S4E,256G,H,SLGA110	U8600	CRITICAL	NAND_U8600:16DP_HY
335S00391	1	NAND,3DV4,512GBT,XXX,S4E,256G,SD,SLGA110	U8600	CRITICAL	NAND_U8600:16DP_WD
335T00022	1	NAND,3DV4,512GBT,S4E,256G,H,SLGA110	U8600	CRITICAL	NAND_U8600:16DP_HY_SLT
335T00016	1	NAND,3DV4,512GBT,XXX,S4E,256G,SD,SLGA110	U8600	CRITICAL	NAND_U8600:16DP_WD_SLT

NAND U8700

PART NUMBER	QTY	DESCRIPTION	REFERENCE DES	CRITICAL	BOM OPTION
335S00377	1	NAND,3DV4,64GBT,S4E,256G,H,SLGA110	U8700	CRITICAL	NAND_U8700:2DP_HY
335S00393	1	NAND,3DV4,64GBT,XXX,S4E,256G,H,SLGA110	U8700	CRITICAL	NAND_U8700:2DP_TS
335S00388	1	NAND,3DV4,64GBT,XXX,S4E,256G,SD,SLGA110	U8700	CRITICAL	NAND_U8700:2DP_WD
335S00416	1	NAND,3DV5,64GBT,S4E,256G,SS,SLGA110	U8700	CRITICAL	NAND_U8700:2DP_SS
335T00001	1	NAND,3DV5,64GBT,XXX,S4E,256G,T,SLGA110	U8700	CRITICAL	NAND_U8700:2DP_TS_SLT
335T00017	1	NAND,3DV5,64GBT,S4E,256G,H,SLGA110	U8700	CRITICAL	NAND_U8700:2DP_HY_SLT
335T00008	1	NAND,3DV5,64GBT,S4E,256G,SS,SLGA110	U8700	CRITICAL	NAND_U8700:2DP_SS_SLT
335S00394	1	NAND,3DV4,128GBT,XXX,256G,T,SLGA110	U8700	CRITICAL	NAND_U8700:4DP_TS
335S00378	1	NAND,3DV4,128GBT,S4E,256G,H,SLGA110	U8700	CRITICAL	NAND_U8700:4DP_HY
335S00424	1	NAND,3DV5,128GBT,S4E,256G,SS,SLGA110	U8700	CRITICAL	NAND_U8700:4DP_SS
335T00002	1	NAND,3DV4,128GBT,XXX,S4E,256G,T,SLGA110	U8700	CRITICAL	NAND_U8700:4DP_TS_SLT
335T00018	1	NAND,3DV4,128GBT,S4E,256G,H,SLGA110	U8700	CRITICAL	NAND_U8700:4DP_HY_SLT
335T00009	1	NAND,3DV5,128GBT,S4E,256G,SS,SLGA110	U8700	CRITICAL	NAND_U8700:4DP_SS_SLT
335S00398	1	NAND,3DV4,192GBT,XXX,S4E,256G,H,SLGA110	U8700	CRITICAL	NAND_U8700:6DP_HY
335S00395	1	NAND,3DV4,192GBT,XXX,S4E,256G,T,SLGA110	U8700	CRITICAL	NAND_U8700:6DP_TS
335T00005	1	NAND,3DV4,192GBT,XXX,S4E,256G,T,SLGA110	U8700	CRITICAL	NAND_U8700:6DP_TS_SLT
335T00019	1	NAND,3DV4,192GBT,XXX,S4E,256G,H,SLGA110	U8700	CRITICAL	NAND_U8700:6DP_HY_SLT
335S00379	1	NAND,3DV4,256GBT,S4E,256G,H,SLGA110	U8700	CRITICAL	NAND_U8700:8DP_HY
335S00327	1	NAND,3DV3,256GBP,133,S4E,170G,SD,ULGA110	U8700	CRITICAL	NAND_U8700:8DP_WD
335S00396	1	NAND,3DV4,256GBT,XXX,S4E,256G,T,SLGA110	U8700	CRITICAL	NAND_U8700:8DP_TS
335T00006	1	NAND,3DV4,256GBT,XXX,S4E,256G,T,SLGA110	U8700	CRITICAL	NAND_U8700:8DP_TS_SLT
335T00020	1	NAND,3DV4,256GBT,S4E,256G,H,SLGA110	U8700	CRITICAL	NAND_U8700:8DP_HY_SLT
335S00399	1	NAND,3DV4,320GBT,XXX,S4E,256G,H,SLGA110	U8700	CRITICAL	NAND_U8700:10DP_HY
335S00397	1	NAND,3DV4,320GBT,XXX,S4E,256G,T,SLGA110	U8700	CRITICAL	NAND_U8700:10DP_TS
335T00021	1	NAND,3DV4,320GBT,XXX,S4E,256G,H,SLGA110	U8700	CRITICAL	NAND_U8700:10DP_HY_SLT
335T00007	1	NAND,3DV4,320GBT,XXX,S4E,256G,T,SLGA110	U8700	CRITICAL	NAND_U8700:10DP_TS_SLT
335S00380	1	NAND,3DV4,512GBT,S4E,256G,H,SLGA110	U8700	CRITICAL	NAND_U8700:16DP_HY
335S00391	1	NAND,3DV4,512GBT,XXX,S4E,256G,SD,SLGA110	U8700	CRITICAL	NAND_U8700:16DP_WD
335T00022	1	NAND,3DV4,512GBT,S4E,256G,H,SLGA110	U8700	CRITICAL	NAND_U8700:16DP_HY_SLT
335T00016	1	NAND,3DV4,512GBT,XXX,S4E,256G,SD,SLGA110	U8700	CRITICAL	NAND_U8700:16DP_WD_SLT

NAND U8800

PART NUMBER	QTY	DESCRIPTION	REFERENCE DES	CRITICAL	BOM OPTION
335S00377	1	NAND,3DV4,64GBT,S4E,256G,H,SLGA110	U8800	CRITICAL	NAND_U8800:2DP_HY
335S00393	1	NAND,3DV4,64GBT,XXX,S4E,256G,H,SLGA110	U8800	CRITICAL	NAND_U8800:2DP_TS
335S00388	1	NAND,3DV4,64GBT,XXX,S4E,256G,SD,SLGA110	U8800	CRITICAL	NAND_U8800:2DP_WD
335S00416	1	NAND,3DV5,64GBT,S4E,256G,SS,SLGA110	U8800	CRITICAL	NAND_U8800:2DP_SS
335T00001	1	NAND,3DV5,64GBT,XXX,S4E,256G,T,SLGA110	U8800	CRITICAL	NAND_U8800:2DP_TS_SLT
335T00017	1	NAND,3DV5,64GBT,S4E,256G,H,SLGA110	U8800	CRITICAL	NAND_U8800:2DP_HY_SLT
335T00008	1	NAND,3DV5,64GBT,S4E,256G,SS,SLGA110	U8800	CRITICAL	NAND_U8800:2DP_SS_SLT
335S00394	1	NAND,3DV4,128GBT,XXX,256G,T,SLGA110	U8800	CRITICAL	NAND_U8800:4DP_TS
335S00378	1	NAND,3DV4,128GBT,S4E,256G,H,SLGA110	U8800	CRITICAL	NAND_U8800:4DP_HY
335S00424	1	NAND,3DV5,128GBT,S4E,256G,SS,SLGA110	U8800	CRITICAL	NAND_U8800:4DP_SS
335T00002	1	NAND,3DV4,128GBT,XXX,S4E,256G,T,SLGA110	U8800	CRITICAL	NAND_U8800:4DP_TS_SLT
335T00018	1	NAND,3DV4,128GBT,S4E,256G,H,SLGA110	U8800	CRITICAL	NAND_U8800:4DP_HY_SLT
335T00009	1	NAND,3DV5,128GBT,S4E,256G,SS,SLGA110	U8800	CRITICAL	NAND_U8800:4DP_SS_SLT
335S00398	1	NAND,3DV4,192GBT,XXX,S4E,256G,H,SLGA110	U8800	CRITICAL	NAND_U8800:6DP_HY
335S00395	1	NAND,3DV4,192GBT,XXX,S4E,256G,T,SLGA110	U8800	CRITICAL	NAND_U8800:6DP_TS
335T00005	1	NAND,3DV4,192GBT,XXX,S4E,256G,T,SLGA110	U8800	CRITICAL	NAND_U8800:6DP_TS_SLT
335T00019	1	NAND,3DV4,192GBT,XXX,S4E,256G,H,SLGA110	U8800	CRITICAL	NAND_U8800:6DP_HY_SLT
335S00379	1	NAND,3DV4,256GBT,S4E,256G,H,SLGA110	U8800	CRITICAL	NAND_U8800:8DP_HY
335S00327	1	NAND,3DV3,256GBP,133,S4E,170G,SD,ULGA110	U8800	CRITICAL	NAND_U8800:8DP_WD
335S00396	1	NAND,3DV4,256GBT,XXX,S4E,256G,T,SLGA110	U8800	CRITICAL	NAND_U8800:8DP_TS
335T00006	1	NAND,3DV4,256GBT,XXX,S4E,256G,T,SLGA110	U8800	CRITICAL	NAND_U8800:8DP_TS_SLT
335T00020	1	NAND,3DV4,256GBT,S4E,256G,H,SLGA110	U8800	CRITICAL	NAND_U8800:8DP_HY_SLT
335S00399	1	NAND,3DV4,320GBT,XXX,S4E,256G,H,SLGA110	U8800	CRITICAL	NAND_U8800:10DP_HY
335S00397	1	NAND,3DV4,320GBT,XXX,S4E,256G,T,SLGA110	U8800	CRITICAL	NAND_U8800:10DP_TS
335T00021	1	NAND,3DV4,320GBT,XXX,S4E,256G,H,SLGA110	U8800	CRITICAL	NAND_U8800:10DP_HY_SLT
335T00007	1	NAND,3DV4,320GBT,XXX,S4E,256G,T,SLGA110	U8800	CRITICAL	NAND_U8800:10DP_TS_SLT
335S00380	1	NAND,3DV4,512GBT,S4E,256G,H,SLGA110	U8800	CRITICAL	NAND_U8800:16DP_HY
335S00391	1	NAND,3DV4,512GBT,XXX,S4E,256G,SD,SLGA110	U8800	CRITICAL	NAND_U8800:16DP_WD
335T00022	1	NAND,3DV4,512GBT,S4E,256G,H,SLGA110	U8800	CRITICAL	NAND_U8800:16DP_HY_SLT
335T00016	1	NAND,3DV4,512GBT,XXX,S4E,256G,SD,SLGA110	U8800	CRITICAL	NAND_U8800:16DP_WD_SLT

NAND U8900

PART NUMBER	QTY	DESCRIPTION	REFERENCE DES	CRITICAL	BOM OPTION
335S00377	1	NAND,3DV4,64GBT,S4E,256G,H,SLGA110	U8900	CRITICAL	NAND_U8900:2DP_HY
335S00393	1	NAND,3DV4,64GBT,XXX,S4E,256G,H,SLGA110	U8900	CRITICAL	NAND_U8900:2DP_TS
335S00388	1	NAND,3DV4,64GBT,XXX,S4E,256G,SD,SLGA110	U8900	CRITICAL	NAND_U8900:2DP_WD
335S00416	1	NAND,3DV5,64GBT,S4E,256G,SS,SLGA110	U8900	CRITICAL	NAND_U8900:2DP_SS
335T00001	1	NAND,3DV5,64GBT,XXX,S4E,256G,T,SLGA110	U8900	CRITICAL	NAND_U8900:2DP_TS_SLT
335T00017	1	NAND,3DV5,64GBT,S4E,256G,H,SLGA110	U8900	CRITICAL	NAND_U8900:2DP_HY_SLT
335T00008	1	NAND,3DV5,64GBT,S4E,256G,SS,SLGA110	U8900	CRITICAL	NAND_U8900:2DP_SS_SLT
335S00394	1	NAND,3DV4,128GBT,XXX,256G,T,SLGA110	U8900	CRITICAL	NAND_U8900:4DP_TS
335S00378	1	NAND,3DV4,128GBT,S4E,256G,H,SLGA110	U8900	CRITICAL	NAND_U8900:4DP_HY
335S00424	1	NAND,3DV5,128GBT,S4E,256G,SS,SLGA110	U8900	CRITICAL	NAND_U8900:4DP_SS
335T00002	1	NAND,3DV4,128GBT,XXX,S4E,256G,T,SLGA110	U8900	CRITICAL	NAND_U8900:4DP_TS_SLT
335T00018	1	NAND,3DV4,128GBT,S4E,256G,H,SLGA110	U8900	CRITICAL	NAND_U8900:4DP_HY_SLT
335T00009	1	NAND,3DV5,128GBT,S4E,256G,SS,SLGA110	U8900	CRITICAL	NAND_U8900:4DP_SS_SLT
335S00398	1	NAND,3DV4,192GBT,XXX,S4E,256G,H,SLGA110	U8900	CRITICAL	NAND_U8900:6DP_HY
335S00395	1	NAND,3DV4,192GBT,XXX,S4E,256G,T,SLGA110	U8900	CRITICAL	NAND_U8900:6DP_TS
335T00005	1	NAND,3DV4,192GBT,XXX,S4E,256G,T,SLGA110	U8900	CRITICAL	NAND_U8900:6DP_TS_SLT
335T00019	1	NAND,3DV4,192GBT,XXX,S4E,256G,H,SLGA110	U8900	CRITICAL	NAND_U8900:6DP_HY_SLT
335S00379	1	NAND,3DV4,256GBT,S4E,256G,H,SLGA110	U8900	CRITICAL	NAND_U8900:8DP_HY
335S00327	1	NAND,3DV3,256GBP,133,S4E,170G,SD,ULGA110	U8900	CRITICAL	NAND_U8900:8DP_WD
335S00396	1	NAND,3DV4,256GBT,XXX,S4E,256G,T,SLGA110	U8900	CRITICAL	NAND_U8900:8DP_TS
335T00006	1	NAND,3DV4,256GBT,XXX,S4E,256G,T,SLGA110	U8900	CRITICAL	NAND_U8900:8DP_TS_SLT
335T00020	1	NAND,3DV4,256GBT,S4E,256G,H,SLGA110	U8900	CRITICAL	NAND_U8900:8DP_HY_SLT
335S00399	1	NAND,3DV4,320GBT,XXX,S4E,256G,H,SLGA110	U8900	CRITICAL	NAND_U8900:10DP_HY
335S00397	1	NAND,3DV4,320GBT,XXX,S4E,256G,T,SLGA110	U8900	CRITICAL	NAND_U8900:10DP_TS
335T00021	1	NAND,3DV4,320GBT,XXX,S4E,256G,H,SLGA110	U8900	CRITICAL	NAND_U8900:10DP_HY_SLT
335T00007	1	NAND,3DV4,320GBT,XXX,S4E,256G,T,SLGA110	U8900	CRITICAL	NAND_U8900:10DP_TS_SLT
335S00380	1	NAND,3DV4,512GBT,S4E,256G,H,SLGA110	U8900	CRITICAL	NAND_U8900:16DP_HY
335S00391	1	NAND,3DV4,512GBT,XXX,S4E,256G,SD,SLGA110	U8900	CRITICAL	NAND_U8900:16DP_WD
335T00022	1	NAND,3DV4,512GBT,S4E,256G,H,SLGA110	U8900	CRITICAL	NAND_U8900:16DP_HY_SLT
335T00016	1	NAND,3DV4,512GBT,XXX,S4E,256G,SD,SLGA110	U8900	CRITICAL	NAND_U8900:16DP_WD_SLT

SYNC_MASTER= SYNC_DATE=

PAGE TITLE

BOM CONFIGURATION

Apple Inc.

DRAWING NUMBER 051-05309 SIZE D

REVISION 5.1.0

BRANCH

PAGE 401 OF 500

SHEET 92 OF 98

NOTICE OF PROPRIETARY PROPERTY:
THE INFORMATION CONTAINED HEREIN IS THE PROPRIETARY PROPERTY OF APPLE INC.
THE POSESSOR AGREES TO THE FOLLOWING:
I TO MAINTAIN THIS DOCUMENT IN CONFIDENCE
II NOT TO REPRODUCE OR COPY IT
III NOT TO REVEAL OR PUBLISH IT IN WHOLE OR PART
IV ALL RIGHTS RESERVED

www.haojiyoubbs.com
QQ微信：181806465

COMMON BOM GROUPS

BOM GROUP	BOM OPTIONS
X1782_COMMON_PARTS	SCH,PCB,ALT_CMN,COMMON,ALTERNATE:PART,X1782_USB,X1782_WIFI_MISC,X1782_X86,X1782_MISC,X1782_T290,SENSE_PROD
X1782_USB	TBT:TR_C1_PRQ,UPC:ACE2_B2,TBT_ROM:EVT,USBC_SHLD
X1782_WIFI_MISC	MODULE:MUR_ES_3P1,WIFI_ROM:DVT,BT_ROM:P1,STANDOFFS_TOP,STANDOFFS_BOT,CPU_SLEDS
X1782_X86	EDP_ENABLE,DR_MOS_CORE:VISHAY,DR_MOS_VCCSA:VISHAY,DR_MOS_GT:VISHAY,IND_VCCSA:CYNTEC,DRAM_TOP_FENC,DRAM_BOT_CAN
X1782_T290	BOARDID0,BOARDID1,BOARDID3,BOARDID4,BOARDID5,BOARDREV2,CALPE_L:OTP_BC,SE:PROD_2019,NAND_VCC:2.5V,MEGA_SHLD
X1782_MISC	CHARGER_IC:POC,AMR:POC,SPEAKER_AMP:B2,SOC_DFU_BYPASS,BKLT_FILT:ZERO_OHM,XDP:YES,WASHER_DFR,LOADRC:NO

DEBUG BOM PARTS

BOM GROUP	BOM OPTIONS
X1782_DEV_1	XDP_CONN:YES
X1782_DEV_2	USBC_AARDVARKANOID,USBC_ARKANOID

DRAM AND SPD

BOM GROUP	BOM OPTIONS
X1782_08GB_HY	DRAM:08GB_HY,RAMCFG4_L,RAMCFG3_L,RAMCFG2_L,RAMCFG1_L,RAMCFG0_L
X1782_08GB_SS	DRAM:08GB_SS_D,RAMCFG2_L,RAMCFG0_L
X1782_16GB_HY	DRAM:16GB_HY,RAMCFG4_L,RAMCFG3_L,RAMCFG1_L,RAMCFG0_L
X1782_16GB_SS	DRAM:16GB_SS_D,RAMCFG0_L
X1782_NO_DRAM	DRAM:OFF

CPU

BOM GROUP	BOM OPTIONS
X1782_CPU_1P4GHZ	CPU:15W_1P4G_SREZ2
X1782_CPU_1P7GHZ	CPU:15W_1P7G_SREZ1
X1782_CPU_NO_CPU	CPU:OFF

SOC AND NAND

BOM GROUP	BOM OPTIONS
X1782_TLC_128GB_HY	SOC:PROD_B0_1G,SSD:2L,NAND_U8600:2DP_HY_SLT,NAND_U8700:2DP_HY_SLT
X1782_TLC_128GB_TS	SOC:PROD_B0_1G,SSD:2L,NAND_U8600:2DP_TS_SLT,NAND_U8700:2DP_TS_SLT
X1782_TLC_256GB_HY	SOC:PROD_B0_1G,SSD:4L,NAND_U8600:4DP_HY_SLT,NAND_U8700:2DP_HY_SLT,NAND_U8800:2DP_HY_SLT,NAND_U8900:2DP_HY_SLT
X1782_TLC_256GB_TS	SOC:PROD_B0_1G,SSD:4L,NAND_U8600:4DP_TS_SLT,NAND_U8700:2DP_TS_SLT,NAND_U8800:2DP_TS_SLT,NAND_U8900:2DP_TS_SLT
X1782_TLC_256GB_SS	SOC:PROD_B0_1G,SSD:4L,NAND_U8600:4DP_SS_SLT,NAND_U8700:2DP_SS_SLT,NAND_U8800:2DP_SS_SLT,NAND_U8900:2DP_SS_SLT
X1782_TLC_512GB_HY	SOC:PROD_B0_1G,SSD:4L,NAND_U8600:6DP_HY_SLT,NAND_U8700:6DP_HY_SLT,NAND_U8800:4DP_HY_SLT,NAND_U8900:4DP_HY_SLT
X1782_TLC_512GB_TS	SOC:PROD_B0_1G,SSD:4L,NAND_U8600:6DP_TS_SLT,NAND_U8700:6DP_TS_SLT,NAND_U8800:4DP_TS_SLT,NAND_U8900:4DP_TS_SLT
X1782_TLC_001TB_HY	SOC:PROD_B0_2G,SSD:4L,NAND_U8600:10DP_HY_SLT,NAND_U8700:10DP_HY_SLT,NAND_U8800:8DP_HY_SLT,NAND_U8900:8DP_HY_SLT
X1782_TLC_001TB_TS	SOC:PROD_B0_2G,SSD:4L,NAND_U8600:10DP_TS_SLT,NAND_U8700:10DP_TS_SLT,NAND_U8800:8DP_TS_SLT,NAND_U8900:8DP_TS_SLT
X1782_TLC_002TB_HY	SOC:PROD_B0_2G,SSD:4L,NAND_U8600:16DP_HY_SLT,NAND_U8700:16DP_HY_SLT,NAND_U8800:16DP_HY_SLT,NAND_U8900:16DP_HY_SLT
X1782_TLC_002TB_WD	SOC:PROD_B0_2G,SSD:4L,NAND_U8600:16DP_WD_SLT,NAND_U8700:16DP_WD_SLT,NAND_U8800:16DP_WD_SLT,NAND_U8900:16DP_WD_SLT
X1782_NO_NAND_2_LD	SOC:OFF,SSD:2L,NAND_U8600:OFF,NAND_U8700:OFF,NAND_U8800:OFF,NAND_U8900:OFF
X1782_NO_NAND_4_LD	SOC:OFF,SSD:4L,NAND_U8600:OFF,NAND_U8700:OFF,NAND_U8800:OFF,NAND_U8900:OFF

CPU DRAM CFG[4:0] CHART

DIE REV	CFG 4
A	0
B	1

SPEED	CFG 3
2133	0
1866	1

CAPACITY	CFG 2
8GB	0
16GB	1

VENDOR	CFG 1	CFG 0
HYNIX	0	0
MICRON	0	1
SAMSUNG	1	0
N/A	1	1

SYSTEM PARTS

PART NUMBER	QTY	DESCRIPTION	REFERENCE DES	CRITICAL	BOM OPTION
051-05309	1	SCHEM,MLB,X1782	SCH	CRITICAL	SCH
820-01987	1	PCBF,MLB,X1782	PCB	CRITICAL	PCB
685-00331	1	COMMON PARTS,MLB,X1782	COMMON_PARTS	CRITICAL	X1782_COMMON_BOM
985-01184	1	DEV,COMMON PARTS,MLB,X1782	DEV_PARTS	CRITICAL	X1782_DEV_BOM

TOP LEVEL BOM

639-XXXX (POR) OR 939-XXXX (DEV)

- COMMON PARTS BOM
  685-00331
- DEBUG PARTS BOM
  985-01184

COMMON PARTS BOM

BOM NUMBER	BOM NAME	BOM OPTIONS
685-00331	COMMON_PARTS,MLB,X1782	X1782_COMMON_PARTS

DEBUG PARTS

BOM NUMBER	BOM NAME	BOM OPTIONS
985-01184	DEV,COMMON_PARTS,MLB,X1782	X1782_DEV_1,X1782_DEV_2

NOTES:

"SENSOR:DEV" IS FOR SENSE RESISTORS. WHEN CURRENT SENSING IS REMOVED AT DVT, THESE RESISTORS WILL BE REPLACED WITH A SPECIAL SYMBOL, A COPPER SHAPE SHORTING THE TWO TERMINALS

"LOADISNS" ARE CIRCUITS ONLY REQUIRED UNTIL DVT TO MEASURE/SENSE CURRENT. SENSE CIRCUITS REQUIRED BY SMC WILL NOT HAVE THIS OPTION SINCE THEY WILL STAY TILL PVT

"LOADRC:YES/NO" RC FILTERS INTO ADC WILL BE REPLACED BY 100K PD ONCE THE SENSE CIRCUITS GO AWAY

SYNC_MASTER= SYNC_DATE=

PAGE TITLE

BOM GROUPS

Apple Inc.

DRAWING NUMBER 051-05309 SIZE D

REVISION 5.1.0

BRANCH

PAGE 403 OF 500

SHEET 93 OF 98

NOTICE OF PROPRIETARY PROPERTY:
THE INFORMATION CONTAINED HEREIN IS THE PROPRIETARY PROPERTY OF APPLE INC.
THE POSESSOR AGREES TO THE FOLLOWING:
I TO MAINTAIN THIS DOCUMENT IN CONFIDENCE
II NOT TO REPRODUCE OR COPY IT
III NOT TO REVEAL OR PUBLISH IT IN WHOLE OR PART
IV ALL RIGHTS RESERVED

www.haojiyoubbs.com
QQ微信：181806465

POR BOMS - MLB-1 (1.4 GHZ CPU)

BOM NUMBER	BOM NAME	BOM OPTIONS
639-09103	MLB-1,SS-8GB,TS-128GB,X1782	ALT_CMN,ALTERNATE:PART,X1782_COMMON_BOM,X1782_DEV_BOM,X1782_CPU_1P4GHZ,X1782_08GB_SS,X1782_TLC_128GB_TS
639-09102	MLB-1,HY-8GB,TS-128GB,X1782	ALT_CMN,ALTERNATE:PART,X1782_COMMON_BOM,X1782_DEV_BOM,X1782_CPU_1P4GHZ,X1782_08GB_HY,X1782_TLC_128GB_TS
639-10001	MLB-1,SS-8GB,HY-128GB,X1782	ALT_CMN,ALTERNATE:PART,X1782_COMMON_BOM,X1782_DEV_BOM,X1782_CPU_1P4GHZ,X1782_08GB_SS,X1782_TLC_128GB_HY
639-10002	MLB-1,HY-8GB,HY-128GB,X1782	ALT_CMN,ALTERNATE:PART,X1782_COMMON_BOM,X1782_DEV_BOM,X1782_CPU_1P4GHZ,X1782_08GB_HY,X1782_TLC_128GB_HY
639-10003	MLB-1,SS-16GB,HY-128GB,X1782	ALT_CMN,ALTERNATE:PART,X1782_COMMON_BOM,X1782_DEV_BOM,X1782_CPU_1P4GHZ,X1782_16GB_SS,X1782_TLC_128GB_HY
639-10004	MLB-1,SS-16GB,TS-128GB,X1782	ALT_CMN,ALTERNATE:PART,X1782_COMMON_BOM,X1782_DEV_BOM,X1782_CPU_1P4GHZ,X1782_16GB_SS,X1782_TLC_128GB_TS
639-10005	MLB-1,HY-16GB,HY-128GB,X1782	ALT_CMN,ALTERNATE:PART,X1782_COMMON_BOM,X1782_DEV_BOM,X1782_CPU_1P4GHZ,X1782_16GB_HY,X1782_TLC_128GB_HY
639-10006	MLB-1,HY-16GB,TS-128GB,X1782	ALT_CMN,ALTERNATE:PART,X1782_COMMON_BOM,X1782_DEV_BOM,X1782_CPU_1P4GHZ,X1782_16GB_HY,X1782_TLC_128GB_TS
639-10007	MLB-1,SS-8GB,HY-256GB,X1782	ALT_CMN,ALTERNATE:PART,X1782_COMMON_BOM,X1782_DEV_BOM,X1782_CPU_1P4GHZ,X1782_08GB_SS,X1782_TLC_256GB_HY
639-10008	MLB-1,SS-8GB,SS-256GB,X1782	ALT_CMN,ALTERNATE:PART,X1782_COMMON_BOM,X1782_DEV_BOM,X1782_CPU_1P4GHZ,X1782_08GB_SS,X1782_TLC_256GB_SS
639-10009	MLB-1,SS-8GB,TS-256GB,X1782	ALT_CMN,ALTERNATE:PART,X1782_COMMON_BOM,X1782_DEV_BOM,X1782_CPU_1P4GHZ,X1782_08GB_SS,X1782_TLC_256GB_TS
639-10010	MLB-1,HY-8GB,HY-256GB,X1782	ALT_CMN,ALTERNATE:PART,X1782_COMMON_BOM,X1782_DEV_BOM,X1782_CPU_1P4GHZ,X1782_08GB_HY,X1782_TLC_256GB_HY
639-10011	MLB-1,HY-8GB,SS-256GB,X1782	ALT_CMN,ALTERNATE:PART,X1782_COMMON_BOM,X1782_DEV_BOM,X1782_CPU_1P4GHZ,X1782_08GB_HY,X1782_TLC_256GB_SS
639-10012	MLB-1,HY-8GB,TS-256GB,X1782	ALT_CMN,ALTERNATE:PART,X1782_COMMON_BOM,X1782_DEV_BOM,X1782_CPU_1P4GHZ,X1782_08GB_HY,X1782_TLC_256GB_TS
639-10013	MLB-1,SS-16GB,HY-256GB,X1782	ALT_CMN,ALTERNATE:PART,X1782_COMMON_BOM,X1782_DEV_BOM,X1782_CPU_1P4GHZ,X1782_16GB_SS,X1782_TLC_256GB_HY
639-10014	MLB-1,SS-16GB,SS-256GB,X1782	ALT_CMN,ALTERNATE:PART,X1782_COMMON_BOM,X1782_DEV_BOM,X1782_CPU_1P4GHZ,X1782_16GB_SS,X1782_TLC_256GB_SS
639-10015	MLB-1,SS-16GB,TS-256GB,X1782	ALT_CMN,ALTERNATE:PART,X1782_COMMON_BOM,X1782_DEV_BOM,X1782_CPU_1P4GHZ,X1782_16GB_SS,X1782_TLC_256GB_TS
639-10016	MLB-1,HY-16GB,HY-256GB,X1782	ALT_CMN,ALTERNATE:PART,X1782_COMMON_BOM,X1782_DEV_BOM,X1782_CPU_1P4GHZ,X1782_16GB_HY,X1782_TLC_256GB_HY
639-10017	MLB-1,HY-16GB,SS-256GB,X1782	ALT_CMN,ALTERNATE:PART,X1782_COMMON_BOM,X1782_DEV_BOM,X1782_CPU_1P4GHZ,X1782_16GB_HY,X1782_TLC_256GB_SS
639-10018	MLB-1,HY-16GB,TS-256GB,X1782	ALT_CMN,ALTERNATE:PART,X1782_COMMON_BOM,X1782_DEV_BOM,X1782_CPU_1P4GHZ,X1782_16GB_HY,X1782_TLC_256GB_TS
639-10019	MLB-1,SS-8GB,TS-512GB,X1782	ALT_CMN,ALTERNATE:PART,X1782_COMMON_BOM,X1782_DEV_BOM,X1782_CPU_1P4GHZ,X1782_08GB_SS,X1782_TLC_512GB_TS
639-10020	MLB-1,HY-8GB,HY-512GB,X1782	ALT_CMN,ALTERNATE:PART,X1782_COMMON_BOM,X1782_DEV_BOM,X1782_CPU_1P4GHZ,X1782_08GB_HY,X1782_TLC_512GB_HY
639-10021	MLB-1,HY-8GB,TS-512GB,X1782	ALT_CMN,ALTERNATE:PART,X1782_COMMON_BOM,X1782_DEV_BOM,X1782_CPU_1P4GHZ,X1782_08GB_HY,X1782_TLC_512GB_TS
639-10022	MLB-1,SS-16GB,HY-512GB,X1782	ALT_CMN,ALTERNATE:PART,X1782_COMMON_BOM,X1782_DEV_BOM,X1782_CPU_1P4GHZ,X1782_16GB_SS,X1782_TLC_512GB_HY
639-10023	MLB-1,SS-16GB,TS-512GB,X1782	ALT_CMN,ALTERNATE:PART,X1782_COMMON_BOM,X1782_DEV_BOM,X1782_CPU_1P4GHZ,X1782_16GB_SS,X1782_TLC_512GB_TS
639-10024	MLB-1,HY-16GB,HY-512GB,X1782	ALT_CMN,ALTERNATE:PART,X1782_COMMON_BOM,X1782_DEV_BOM,X1782_CPU_1P4GHZ,X1782_16GB_HY,X1782_TLC_512GB_HY
639-10025	MLB-1,HY-16GB,TS-512GB,X1782	ALT_CMN,ALTERNATE:PART,X1782_COMMON_BOM,X1782_DEV_BOM,X1782_CPU_1P4GHZ,X1782_16GB_HY,X1782_TLC_512GB_TS
639-10026	MLB-1,SS-8GB,HY-1TB,X1782	ALT_CMN,ALTERNATE:PART,X1782_COMMON_BOM,X1782_DEV_BOM,X1782_CPU_1P4GHZ,X1782_08GB_SS,X1782_TLC_001TB_HY
639-10027	MLB-1,SS-8GB,TS-1TB,X1782	ALT_CMN,ALTERNATE:PART,X1782_COMMON_BOM,X1782_DEV_BOM,X1782_CPU_1P4GHZ,X1782_08GB_SS,X1782_TLC_001TB_TS
639-10028	MLB-1,HY-8GB,HY-1TB,X1782	ALT_CMN,ALTERNATE:PART,X1782_COMMON_BOM,X1782_DEV_BOM,X1782_CPU_1P4GHZ,X1782_08GB_HY,X1782_TLC_001TB_HY
639-10029	MLB-1,HY-8GB,TS-1TB,X1782	ALT_CMN,ALTERNATE:PART,X1782_COMMON_BOM,X1782_DEV_BOM,X1782_CPU_1P4GHZ,X1782_08GB_HY,X1782_TLC_001TB_TS
639-10030	MLB-1,SS-16GB,HY-1TB,X1782	ALT_CMN,ALTERNATE:PART,X1782_COMMON_BOM,X1782_DEV_BOM,X1782_CPU_1P4GHZ,X1782_16GB_SS,X1782_TLC_001TB_HY
639-10031	MLB-1,SS-16GB,TS-1TB,X1782	ALT_CMN,ALTERNATE:PART,X1782_COMMON_BOM,X1782_DEV_BOM,X1782_CPU_1P4GHZ,X1782_16GB_SS,X1782_TLC_001TB_TS
639-10032	MLB-1,HY-16GB,HY-1TB,X1782	ALT_CMN,ALTERNATE:PART,X1782_COMMON_BOM,X1782_DEV_BOM,X1782_CPU_1P4GHZ,X1782_16GB_HY,X1782_TLC_001TB_HY
639-10033	MLB-1,HY-16GB,TS-1TB,X1782	ALT_CMN,ALTERNATE:PART,X1782_COMMON_BOM,X1782_DEV_BOM,X1782_CPU_1P4GHZ,X1782_16GB_HY,X1782_TLC_001TB_TS
639-10034	MLB-1,SS-8GB,HY-2TB,X1782	ALT_CMN,ALTERNATE:PART,X1782_COMMON_BOM,X1782_DEV_BOM,X1782_CPU_1P4GHZ,X1782_08GB_SS,X1782_TLC_002TB_HY
639-10035	MLB-1,SS-8GB,HY-512GB,X1782	ALT_CMN,ALTERNATE:PART,X1782_COMMON_BOM,X1782_DEV_BOM,X1782_CPU_1P4GHZ,X1782_08GB_SS,X1782_TLC_512GB_HY
639-10036	MLB-1,HY-8GB,HY-2TB,X1782	ALT_CMN,ALTERNATE:PART,X1782_COMMON_BOM,X1782_DEV_BOM,X1782_CPU_1P4GHZ,X1782_08GB_HY,X1782_TLC_002TB_HY
639-10037	MLB-1,HY-8GB,WD-2TB,X1782	ALT_CMN,ALTERNATE:PART,X1782_COMMON_BOM,X1782_DEV_BOM,X1782_CPU_1P4GHZ,X1782_08GB_HY,X1782_TLC_002TB_WD
639-10038	MLB-1,SS-16GB,HY-2TB,X1782	ALT_CMN,ALTERNATE:PART,X1782_COMMON_BOM,X1782_DEV_BOM,X1782_CPU_1P4GHZ,X1782_16GB_SS,X1782_TLC_002TB_HY
639-10039	MLB-1,SS-16GB,WD-2TB,X1782	ALT_CMN,ALTERNATE:PART,X1782_COMMON_BOM,X1782_DEV_BOM,X1782_CPU_1P4GHZ,X1782_16GB_SS,X1782_TLC_002TB_WD
639-10040	MLB-1,HY-16GB,HY-2TB,X1782	ALT_CMN,ALTERNATE:PART,X1782_COMMON_BOM,X1782_DEV_BOM,X1782_CPU_1P4GHZ,X1782_16GB_HY,X1782_TLC_002TB_HY
639-10041	MLB-1,HY-16GB,WD-2TB,X1782	ALT_CMN,ALTERNATE:PART,X1782_COMMON_BOM,X1782_DEV_BOM,X1782_CPU_1P4GHZ,X1782_16GB_HY,X1782_TLC_002TB_WD
639-10084	MLB-1,SS-8GB,WD-2TB,X1782	ALT_CMN,ALTERNATE:PART,X1782_COMMON_BOM,X1782_DEV_BOM,X1782_CPU_1P4GHZ,X1782_08GB_SS,X1782_TLC_002TB_WD

SYNC_MASTER= SYNC_DATE=

PAGE TITLE
BOM VARIANT TABLES

Apple Inc.

DRAWING NUMBER 051-05309 SIZE D
REVISION 5.1.0
BRANCH
PAGE 405 OF 500
SHEET 94 OF 98

NOTICE OF PROPRIETARY PROPERTY:
THE INFORMATION CONTAINED HEREIN IS THE PROPRIETARY PROPERTY OF APPLE INC.
THE POSESSOR AGREES TO THE FOLLOWING:
I TO MAINTAIN THIS DOCUMENT IN CONFIDENCE
II NOT TO REPRODUCE OR COPY IT
III NOT TO REVEAL OR PUBLISH IT IN WHOLE OR PART
IV ALL RIGHTS RESERVED

www.haojiyoubbs.com
QQ微信：181806465

POR BOMS - MLB-2 (1.7 GHZ CPU)

BOM NUMBER	BOM NAME	BOM OPTIONS
639-09104	MLB-2,SS-16GB,TS-256GB,X1782	ALT_CMN,ALTERNATE:PART,X1782_COMMON_BOM,X1782_DEV_BOM,X1782_CPU_1P7GHZ,X1782_16GB_SS,X1782_TLC_256GB_TS
639-09105	MLB-2,HY-16GB,TS-1TB,X1782	ALT_CMN,ALTERNATE:PART,X1782_COMMON_BOM,X1782_DEV_BOM,X1782_CPU_1P7GHZ,X1782_16GB_HY,X1782_TLC_001TB_TS
639-10042	MLB-2,SS-8GB,HY-128GB,X1782	ALT_CMN,ALTERNATE:PART,X1782_COMMON_BOM,X1782_DEV_BOM,X1782_CPU_1P7GHZ,X1782_08GB_SS,X1782_TLC_128GB_HY
639-10043	MLB-2,SS-8GB,TS-128GB,X1782	ALT_CMN,ALTERNATE:PART,X1782_COMMON_BOM,X1782_DEV_BOM,X1782_CPU_1P7GHZ,X1782_08GB_SS,X1782_TLC_128GB_TS
639-10044	MLB-2,HY-8GB,HY-128GB,X1782	ALT_CMN,ALTERNATE:PART,X1782_COMMON_BOM,X1782_DEV_BOM,X1782_CPU_1P7GHZ,X1782_08GB_HY,X1782_TLC_128GB_HY
639-10045	MLB-2,HY-8GB,TS-128GB,X1782	ALT_CMN,ALTERNATE:PART,X1782_COMMON_BOM,X1782_DEV_BOM,X1782_CPU_1P7GHZ,X1782_08GB_HY,X1782_TLC_128GB_TS
639-10046	MLB-2,SS-16GB,HY-128GB,X1782	ALT_CMN,ALTERNATE:PART,X1782_COMMON_BOM,X1782_DEV_BOM,X1782_CPU_1P7GHZ,X1782_16GB_SS,X1782_TLC_128GB_HY
639-10047	MLB-2,SS-16GB,TS-128GB,X1782	ALT_CMN,ALTERNATE:PART,X1782_COMMON_BOM,X1782_DEV_BOM,X1782_CPU_1P7GHZ,X1782_16GB_SS,X1782_TLC_128GB_TS
639-10048	MLB-2,HY-16GB,HY-128GB,X1782	ALT_CMN,ALTERNATE:PART,X1782_COMMON_BOM,X1782_DEV_BOM,X1782_CPU_1P7GHZ,X1782_16GB_HY,X1782_TLC_128GB_HY
639-10049	MLB-2,HY-16GB,TS-128GB,X1782	ALT_CMN,ALTERNATE:PART,X1782_COMMON_BOM,X1782_DEV_BOM,X1782_CPU_1P7GHZ,X1782_16GB_HY,X1782_TLC_128GB_TS
639-10050	MLB-2,SS-8GB,HY-256GB,X1782	ALT_CMN,ALTERNATE:PART,X1782_COMMON_BOM,X1782_DEV_BOM,X1782_CPU_1P7GHZ,X1782_08GB_SS,X1782_TLC_256GB_HY
639-10051	MLB-2,SS-8GB,SS-256GB,X1782	ALT_CMN,ALTERNATE:PART,X1782_COMMON_BOM,X1782_DEV_BOM,X1782_CPU_1P7GHZ,X1782_08GB_SS,X1782_TLC_256GB_SS
639-10052	MLB-2,SS-8GB,TS-256GB,X1782	ALT_CMN,ALTERNATE:PART,X1782_COMMON_BOM,X1782_DEV_BOM,X1782_CPU_1P7GHZ,X1782_08GB_SS,X1782_TLC_256GB_TS
639-10053	MLB-2,HY-8GB,HY-256GB,X1782	ALT_CMN,ALTERNATE:PART,X1782_COMMON_BOM,X1782_DEV_BOM,X1782_CPU_1P7GHZ,X1782_08GB_HY,X1782_TLC_256GB_HY
639-10054	MLB-2,HY-8GB,SS-256GB,X1782	ALT_CMN,ALTERNATE:PART,X1782_COMMON_BOM,X1782_DEV_BOM,X1782_CPU_1P7GHZ,X1782_08GB_HY,X1782_TLC_256GB_SS
639-10055	MLB-2,HY-8GB,TS-256GB,X1782	ALT_CMN,ALTERNATE:PART,X1782_COMMON_BOM,X1782_DEV_BOM,X1782_CPU_1P7GHZ,X1782_08GB_HY,X1782_TLC_256GB_TS
639-10056	MLB-2,SS-16GB,HY-256GB,X1782	ALT_CMN,ALTERNATE:PART,X1782_COMMON_BOM,X1782_DEV_BOM,X1782_CPU_1P7GHZ,X1782_16GB_SS,X1782_TLC_256GB_HY
639-10057	MLB-2,SS-16GB,SS-256GB,X1782	ALT_CMN,ALTERNATE:PART,X1782_COMMON_BOM,X1782_DEV_BOM,X1782_CPU_1P7GHZ,X1782_16GB_SS,X1782_TLC_256GB_SS
639-10058	MLB-2,HY-16GB,HY-256GB,X1782	ALT_CMN,ALTERNATE:PART,X1782_COMMON_BOM,X1782_DEV_BOM,X1782_CPU_1P7GHZ,X1782_16GB_HY,X1782_TLC_256GB_HY
639-10059	MLB-2,HY-16GB,SS-256GB,X1782	ALT_CMN,ALTERNATE:PART,X1782_COMMON_BOM,X1782_DEV_BOM,X1782_CPU_1P7GHZ,X1782_16GB_HY,X1782_TLC_256GB_SS
639-10060	MLB-2,HY-16GB,TS-256GB,X1782	ALT_CMN,ALTERNATE:PART,X1782_COMMON_BOM,X1782_DEV_BOM,X1782_CPU_1P7GHZ,X1782_16GB_HY,X1782_TLC_256GB_TS
639-10061	MLB-2,SS-8GB,HY-512GB,X1782	ALT_CMN,ALTERNATE:PART,X1782_COMMON_BOM,X1782_DEV_BOM,X1782_CPU_1P7GHZ,X1782_08GB_SS,X1782_TLC_512GB_HY
639-10062	MLB-2,SS-8GB,TS-512GB,X1782	ALT_CMN,ALTERNATE:PART,X1782_COMMON_BOM,X1782_DEV_BOM,X1782_CPU_1P7GHZ,X1782_08GB_SS,X1782_TLC_512GB_TS
639-10063	MLB-2,HY-8GB,HY-512GB,X1782	ALT_CMN,ALTERNATE:PART,X1782_COMMON_BOM,X1782_DEV_BOM,X1782_CPU_1P7GHZ,X1782_08GB_HY,X1782_TLC_512GB_HY
639-10064	MLB-2,HY-8GB,TS-512GB,X1782	ALT_CMN,ALTERNATE:PART,X1782_COMMON_BOM,X1782_DEV_BOM,X1782_CPU_1P7GHZ,X1782_08GB_HY,X1782_TLC_512GB_TS
639-10065	MLB-2,SS-16GB,HY-512GB,X1782	ALT_CMN,ALTERNATE:PART,X1782_COMMON_BOM,X1782_DEV_BOM,X1782_CPU_1P7GHZ,X1782_16GB_SS,X1782_TLC_512GB_HY
639-10066	MLB-2,SS-16GB,TS-512GB,X1782	ALT_CMN,ALTERNATE:PART,X1782_COMMON_BOM,X1782_DEV_BOM,X1782_CPU_1P7GHZ,X1782_16GB_SS,X1782_TLC_512GB_TS
639-10067	MLB-2,HY-16GB,HY-512GB,X1782	ALT_CMN,ALTERNATE:PART,X1782_COMMON_BOM,X1782_DEV_BOM,X1782_CPU_1P7GHZ,X1782_16GB_HY,X1782_TLC_512GB_HY
639-10068	MLB-2,HY-16GB,TS-512GB,X1782	ALT_CMN,ALTERNATE:PART,X1782_COMMON_BOM,X1782_DEV_BOM,X1782_CPU_1P7GHZ,X1782_16GB_HY,X1782_TLC_512GB_TS
639-10069	MLB-2,SS-8GB,HY-1TB,X1782	ALT_CMN,ALTERNATE:PART,X1782_COMMON_BOM,X1782_DEV_BOM,X1782_CPU_1P7GHZ,X1782_08GB_SS,X1782_TLC_001TB_HY
639-10070	MLB-2,SS-8GB,TS-1TB,X1782	ALT_CMN,ALTERNATE:PART,X1782_COMMON_BOM,X1782_DEV_BOM,X1782_CPU_1P7GHZ,X1782_08GB_SS,X1782_TLC_001TB_TS
639-10071	MLB-2,HY-8GB,HY-1TB,X1782	ALT_CMN,ALTERNATE:PART,X1782_COMMON_BOM,X1782_DEV_BOM,X1782_CPU_1P7GHZ,X1782_08GB_HY,X1782_TLC_001TB_HY
639-10072	MLB-2,HY-8GB,TS-1TB,X1782	ALT_CMN,ALTERNATE:PART,X1782_COMMON_BOM,X1782_DEV_BOM,X1782_CPU_1P7GHZ,X1782_08GB_HY,X1782_TLC_001TB_TS
639-10073	MLB-2,SS-16GB,HY-1TB,X1782	ALT_CMN,ALTERNATE:PART,X1782_COMMON_BOM,X1782_DEV_BOM,X1782_CPU_1P7GHZ,X1782_16GB_SS,X1782_TLC_001TB_HY
639-10074	MLB-2,SS-16GB,TS-1TB,X1782	ALT_CMN,ALTERNATE:PART,X1782_COMMON_BOM,X1782_DEV_BOM,X1782_CPU_1P7GHZ,X1782_16GB_SS,X1782_TLC_001TB_TS
639-10075	MLB-2,HY-16GB,HY-1TB,X1782	ALT_CMN,ALTERNATE:PART,X1782_COMMON_BOM,X1782_DEV_BOM,X1782_CPU_1P7GHZ,X1782_16GB_HY,X1782_TLC_001TB_HY
639-10076	MLB-2,SS-8GB,HY-2TB,X1782	ALT_CMN,ALTERNATE:PART,X1782_COMMON_BOM,X1782_DEV_BOM,X1782_CPU_1P7GHZ,X1782_08GB_SS,X1782_TLC_002TB_HY
639-10077	MLB-2,SS-8GB,WD-2TB,X1782	ALT_CMN,ALTERNATE:PART,X1782_COMMON_BOM,X1782_DEV_BOM,X1782_CPU_1P7GHZ,X1782_08GB_SS,X1782_TLC_002TB_WD
639-10078	MLB-2,HY-8GB,HY-2TB,X1782	ALT_CMN,ALTERNATE:PART,X1782_COMMON_BOM,X1782_DEV_BOM,X1782_CPU_1P7GHZ,X1782_08GB_HY,X1782_TLC_002TB_HY
639-10079	MLB-2,HY-8GB,WD-2TB,X1782	ALT_CMN,ALTERNATE:PART,X1782_COMMON_BOM,X1782_DEV_BOM,X1782_CPU_1P7GHZ,X1782_08GB_HY,X1782_TLC_002TB_WD
639-10080	MLB-2,SS-16GB,HY-2TB,X1782	ALT_CMN,ALTERNATE:PART,X1782_COMMON_BOM,X1782_DEV_BOM,X1782_CPU_1P7GHZ,X1782_16GB_SS,X1782_TLC_002TB_HY
639-10081	MLB-2,SS-16GB,WD-2TB,X1782	ALT_CMN,ALTERNATE:PART,X1782_COMMON_BOM,X1782_DEV_BOM,X1782_CPU_1P7GHZ,X1782_16GB_SS,X1782_TLC_002TB_WD
639-10082	MLB-2,HY-16GB,HY-2TB,X1782	ALT_CMN,ALTERNATE:PART,X1782_COMMON_BOM,X1782_DEV_BOM,X1782_CPU_1P7GHZ,X1782_16GB_HY,X1782_TLC_002TB_HY
639-10083	MLB-2,HY-16GB,WD-2TB,X1782	ALT_CMN,ALTERNATE:PART,X1782_COMMON_BOM,X1782_DEV_BOM,X1782_CPU_1P7GHZ,X1782_16GB_HY,X1782_TLC_002TB_WD

SYNC_MASTER= SYNC_DATE=

PAGE TITLE
BOM VARIANT TABLES

Apple Inc.

DRAWING NUMBER 051-05309 SIZE D
REVISION 5.1.0
BRANCH
PAGE 406 OF 500
SHEET 95 OF 98

NOTICE OF PROPRIETARY PROPERTY:
THE INFORMATION CONTAINED HEREIN IS THE PROPRIETARY PROPERTY OF APPLE INC.
THE POSESSOR AGREES TO THE FOLLOWING:
I TO MAINTAIN THIS DOCUMENT IN CONFIDENCE
II NOT TO REPRODUCE OR COPY IT
III NOT TO REVEAL OR PUBLISH IT IN WHOLE OR PART
IV ALL RIGHTS RESERVED

www.haojiyoubbs.com
QQ微信：181806465

POR BOMS - MLB-2 (1.7 GHZ CPU)

BOM NUMBER	BOM NAME	BOM OPTIONS
939-09001	DEV,MLB-1,NO-CPU-MEM-NAND,2-LAND,X1782	ALT_CMN,ALTERNATE:PART,X1782_COMMON_BOM,X1782_CPU_NO_CPU,X1782_NO_DRAM,X1782_NO_NAND_2_LD
939-09002	DEV,MLB-1,NO-CPU-MEM-NAND,4-LAND,X1782	ALT_CMN,ALTERNATE:PART,X1782_COMMON_BOM,X1782_CPU_NO_CPU,X1782_NO_DRAM,X1782_NO_NAND_4_LD

SYNC_MASTER= SYNC_DATE=

PAGE TITLE
BOM VARIANT TABLES

Apple Inc.

DRAWING NUMBER 051-05309 SIZE D
REVISION 5.1.0
BRANCH
PAGE 407 OF 500
SHEET 96 OF 98

NOTICE OF PROPRIETARY PROPERTY:
THE INFORMATION CONTAINED HEREIN IS THE PROPRIETARY PROPERTY OF APPLE INC.
THE POSESSOR AGREES TO THE FOLLOWING:
I TO MAINTAIN THIS DOCUMENT IN CONFIDENCE
II NOT TO REPRODUCE OR COPY IT
III NOT TO REVEAL OR PUBLISH IT IN WHOLE OR PART
IV ALL RIGHTS RESERVED

www.haojiyoubbs.com
QQ微信：181806465

DC-DC

PART NUMBER	ALTERNATE FOR PART NUMBER	BOM OPTION	REF DES	COMMENTS:	
152S00403	152S00322	ALT_CMN	ALL	<RDAR://39801983>	MURATA PRIMARY, CHILISIN ALT IND,PWR,0.68UH,20%,6.3A,26MOHM,3225
128S00042	128S0311	ALT_CMN	ALL	<RDAR://40172980>	NEC PRIMARY, KEMET ALTERNATE CAP,TANT,POLY,220UF,6.3V,25MOHM,B2
128S00043	128S0311	ALT_CMN	ALL	<RDAR://40172980>	NEC PRIMARY, PANASONIC ALTERNATE CAP,TANT,POLY,220UF,6.3V,25MOHM,B2
128S0264	128S0364	ALT_CMN	ALL	<RDAR://44394151>	KEMET PRIMARY, PANASONIC ALTERNATE CAP,AL,POLY,68UF,20%,16V,40MOHM,D2
152S00726	152S00592	ALT_CMN	ALL	<RDAR://40221857>	CYNTEC PRIMARY, CHILISIN ALTERNATE IND,MLD,1UH,2.6A,95MOHM,2012
152S00724	152S00311	ALT_CMN	ALL	<RDAR://40221450>	CYNTEC PRIMARY, CHILISIN ALTERNATE IND,MLD,1UH,20%,3.8A,55MOHM,2016X1.2MM
152S00398	152S00204	ALT_CMN	ALL	<RDAR://40221612>	CYNTEC PRIMARY, TAIYO ALTERNATE IND,PWR,SHLD,0.22UH,6.7A,0.023 OHM,2012
152S00725	152S00590	ALT_CMN	ALL	<RDAR://40223132>	CYNTEC PRIMARY, CHILISIN ALTERNATE IND,MLD,0.47UH,4.8A,34MOHM,2016
152S00363	152S00048	ALT_CMN	ALL	<RDAR://40040471>	CYNTEC PRIMARY, NEC ALTERNATE IND,MLD,0.22UH,1.9MO,44,8.6X8.0X2.4MM
376S00227	376S00203	ALT_CMN	ALL	<RDAR://40169831>	VISHAY PRIMARY, FAIRCHILD ALTERNATE MOSFET,DL-N,30V,15.6A,13.8MOHM@4.5V,DFN8
376S00204	376S00203	ALT_CMN	ALL	<RDAR://40169831>	VISHAY PRIMARY, DIODES ALTERNATE MOSFET,DL-N,30V,15.6A,13.8MOHM@4.5V,DFN8
376S00226	376S00203	ALT_CMN	ALL	<RDAR://40169831>	VISHAY PRIMARY, VISHAY ALTERNATE MOSFET,DL-N,30V,15.6A,13.8MOHM@4.5V,DFN8
152S00786	152S00344	ALT_CMN	ALL	<RDAR://40169331>	MURATA PRIMARY, CYNTEC ALTERNATE IND,MLD,1UH,20%,4.7A,40MOHM,2520
376S00373	376S1038	ALT_CMN	ALL	<RDAR://40169426>	TI PRIMARY, DIODES ALTERNATE MOFET DUAL-N,30V,20A,9.45/3.6MOHN,3X3DFN
376S00007	376S1179	ALT_CMN	ALL	<RDAR://40170031>	VISHAY PRIMARY, AOS ALTERNATE MOSFET,P-CH,20V,40A,0.0039 OHM,8P,PWRPAK
376S00228	376S1179	ALT_CMN	ALL	<RDAR://40170031>	VISHAY PRIMARY, FAIRCHILD ALTERNATE MOSFET,P-CH,20V,40A,0.0039 OHM,8P,PWRPAK
107S00015	107S00011	ALT_CMN	ALL	<RDAR://40039575>	CYNTEC PRIMARY, TFT ALTERNATE RES,MTL FLM,0.00075OHM,1%,4-L,0612,BLK
128S0392	128S0445	ALT_CMN	ALL	<RDAR://40172491>	PANASONIC PRIMARY, PANASONIC ALTERNATE CAP,TANT,POLY,33UF,20%,16V,40MOHM,D12
353S00831	353S00519	ALT_CMN	ALL	<RDAR://43065874>	VISHAY PRIMARY, FAIRCHILD ALTERNATE IC,SIC621,DR MOS,IMVP-8,60A,PQFN31,5X5MM

128S00039	128S00038	ALT_CMN	ALL	<RDAR://40173276>	KEMET PRIMARY, NEC ALT CAP,TA,POLY,150UF,20%,6.3V,18MO,2A,B2
128S0302	128S00038	ALT_CMN	ALL	<RDAR://40173276>	KEMET PRIMARY, PANASONIC ALT CAP,TA,POLY,150UF,20%,6.3V,18MO,2A,B2
353S00832	353S00525	ALT_CMN	ALL	<RDAR://43067934>	VISHAY PRIMARY, FAIRCHILD ALT IC,SIC532,DR MOS,IMVP-8,30A,PQFN22,45X35
152S01024	152S00386	ALT_CMN	ALL	<RDAR://42185308>	MURATA PRIMARY, CHILISIN ALT IND,MLD,1.0UH,20%,32MOHM,4.8A,3225
152S00707	152S00689	ALT_CMN	ALL	<RDAR://43666396>	CYNTEC PRIMARY, CHILISIN ALT IND,MLD,0.47UH,4.7MO,17.5A,5.6X5.2X2.4MM
376S00303	376S00012	ALT_CMN	ALL	<RDAR://43066124>	TI PRIMARY, DIODES ALT MOSFET DUAL-N,30V,15A,18/5.5MOHM,3X3DFN
376S00282	376S1128	ALT_CMN	ALL	<RDAR://43067686>	DIODES PRIMARY, ON SEMI ALT XSTR,FET,N-CH,30V,300MA,3P DFN
376S00224	376S1128	ALT_CMN	ALL	<RDAR://44187449>	DIODES PRIMARY, NEXPERIA ALT XSTR,FET,N-CH,30V,300MA,3P DFN
128S0578	128S0351	ALT_CMN	ALL	<RDAR://43396612>	SANYO PRIMARY, KEMET ALT CAP,TANT,POLY,330UF,2V,13MOHM,B2
128S00050	128S0351	ALT_CMN	ALL	<RDAR://43396612>	SANYO PRIMARY, NEC ALT CAP,TANT,POLY,330UF,2V,13MOHM,B2
152S00841	152S00238	ALT_CMN	ALL	<RDAR://44152899>	CYNTEC PRIMARY, CHILISIN ALT IND,MLD,0.56UH,7.2MO,16A,5.4X5.2X2.4MM
152S00765	152S00239	ALT_CMN	ALL	<RDAR://44155454>	CYNTEC PRIMARY, CHILISIN ALT IND,MLD,0.68UH,9.0MO,14.5A,5.4X5.2X2.4MM
138S00047	138S00073	ALT_CMN	ALL	<RDAR://44159571>	MURATA PRIMARY, TAIYO ALT CAP,X6S,10UF,20%,6.3V,HZTL,MUR,0402
131S00308	131S00037	ALT_CMN	ALL	<RDAR://44160572>	MURATA PRIMARY, YAGEO ALT CAP,CER,C0G,3300PF,5%,50V,0603
107S00087	107S00029	ALT_CMN	ALL	<RDAR://44206108>	TFT PRIMARY, YAGEO ALT RES,MTL FLM,0.005OHM,1%,4-L,0612,BLK
128S00026	128S00011	ALT_CMN	ALL	<RDAR://44202728>	KEMET PRIMARY, NEC ALT CAP,TANT,POLY,6.8UF,20%,35V,90MOHM,B1.2
128S00087	128S00011	ALT_CMN	ALL	<RDAR://44202728>	KEMET PRIMARY, PANASONIC ALT CAP,TANT,POLY,6.8UF,20%,35V,90MOHM,B1.2
128S00031	128S00011	ALT_CMN	ALL	<RDAR://44202728>	KEMET PRIMARY, ROHM ALT CAP,TANT,POLY,6.8UF,20%,35V,90MOHM,B1.2
107S00076	107S00044	ALT_CMN	ALL	<RDAR://44205141>	CYNTEC PRIMARY, YAGEO ALT RES,MF,0.010 OHM,0.5%,0612-4T,BLK
152S00368	152S00269	ALT_CMN	ALL	<RDAR://44243170>	CYNTEC PRIMARY, TOKIN ALT IND,MLD,1.0UH,20%,14A,10.7MO,6.6X6.6X2.4
152S00800	152S00268	ALT_CMN	ALL	<RDAR://44244361>	CYNTEC PRIMARY, NEC-TOKIN ALT IND,MLD,1.5UH,20%,12.5A,17.0MO,7.0X6.6MM
138S00084	138S00060	ALT_CMN	ALL	<RDAR://44320030>	138S00060 PRIMARY, 138S00084 ALT CAP,CER,47UF,20%,6.3V,X5R,0603
138S0789	138S0941	ALT_CMN	ALL	<RDAR://44323944>	MURATA PRIMARY, SAMSUNG ALT CAP,CER,2.2UF,20%,25V,X5R,HRZTL,0402,MUR
138S00104	138S0978	ALT_CMN	ALL	<RDAR://44325053>	MURATA PRIMARY, TAIYO ALT CAP,CER,2.2UF,20%,25V,X5R,0402,H=0.55MM
152S00383	152S00198	ALT_CMN	ALL	<RDAR://44325096>	CYNTEC PRIMARY, VISHAY ALT IND,MLD,2.7UH,19.6MO,12.5A,10.9X10X2.4MM
152S00680	152S00198	ALT_CMN	ALL	<RDAR://44325096>	CYNTEC PRIMARY, CHILISIN ALT IND,MLD,2.7UH,19.6MO,12.5A,10.9X10X2.4MM
138S0863	138S0853	ALT_CMN	ALL	<RDAR://44326703>	MURATA PRIMARY, TAIYO YUDEN ALT CAP,CER,15UF,20%,2V,X6S,0402,MURATA
138S00229	138S00107	ALT_CMN	ALL	<RDAR://44362824>	MURATA PRIMARY, KYOCERA ALT CAP,X5R,20UF,20%,10V,0402,H=0.8MM
138S0786	138S0705	ALT_CMN	ALL	<RDAR://44321492>	MURATA PRIMARY, SAMSUNG ALT CAP,CER,X5R,10UF,20%,10V,0402
138S0746	138S0705	ALT_CMN	ALL	<RDAR://44321492>	MURATA PRIMARY, TAIYO YUDEN ALT CAP,CER,X5R,10UF,20%,10V,0402
107S0249	107S0251	ALT_CMN	ALL	<RDAR://44364242>	CYNTEC PRIMARY,TFT ALT RES,SENSE,0.002OHM,1W,4-TERM,1%,0612,CYN
132S00012	132S0401	ALT_CMN	ALL	<RDAR://44325754>	TAIYO YUDEN PRIMARY,MURATA ALT CAP,CER,0.22UF,10%,25V,X7R,0402
138S00077	138S00035	ALT_CMN	ALL	<RDAR://44363047>	MURATA PRIMARY,TAIYO ALT CAP,CER,20UF,20%,2.5V,X6S,HRZTL,0402
138S00093	138S00035	ALT_CMN	ALL	<RDAR://44363047>	MURATA PRIMARY,KYOCERA ALT CAP,CER,20UF,20%,2.5V,X6S,HRZTL,0402
132S00064	132S0409	ALT_CMN	ALL	<RDAR://44325817>	TAIYO PRIMARY,MURATA ALT CAP,CER,X6S,0.1UF,20%,16V,0201
371S00220	371S00181	ALT_CMN	ALL	<RDAR://44622207>	DIODES PRIMARY,ON SEMI ALT DIODE,ZENER,5.6V,250MW,DFN0201
152S01023	152S00384	ALT_CMN	ALL	<RDAR://44622443>	MURATA PRIMARY, CHILISIN ALT IND,MLD,0.48UH,20%,23MOHM,6.7A,3225
138S00015	138S0777	ALT_CMN	ALL	<RDAR://44658436>	MURATA PRIMARY, TAIYO YUDEN AND SAMSUNG ALT CAP,CER,10UF,20%,16V,X6S,0603
103S0321	103S0276	ALT_CMN	ALL	<RDAR://44660673>	CYNTEC PRIMARY, YAGEO ALT RES,MF,4.42K OHM,1/20W,0.1%,0201,SMD
107S00139	107S0178	ALT_CMN	ALL	<RDAR://44693560>	MURATA PRIMARY, PANASONIC ALT THERMISTOR,NTC,220K OHM,4485K,3%,0201
353S02017	353S00525	ALT_CMN	ALL	<RDAR://52858660>	VISHAY PRIMARY, AOS ALT IC,SIC532,DR MOS,IMVP-8,30A,PQFN22,45X35
353S02065	353S00525	ALT_CMN	ALL	<RDAR://52858660>	VISHAY, LOWER COST AS ALT IC,SIC532,DR MOS,IMVP-8,30A,PQFN22,45X35
353S02064	353S00525	ALT_CMN	ALL	<RDAR://52858660>	VISHAY, LOWER COST AS ALT IC,SIC532,DR MOS,IMVP-8,30A,PQFN22,45X35
353S02192	353S00519	ALT_CMN	ALL	<RDAR://52921454>	VISHAY, LOWER COST AS ALT IC,SIC621,DR MOS,IMVP-8,60A,PQFN31,5X5MM
128S0436	128S0445	ALT_CMN	ALL	<RDAR://54142831>	PANASONIC PRIMARY,KEMET AS ALT CAP, TANT,POLY,33UF,20%,16V,40MOHM,D12
128S00109	128S00041	ALT_CMN	ALL		JAPAN ONLY PRIMARY, DUAL FLOW AS ALT CAP,AL,POLY,220UF,20%,2V,2.5MOHM,6A,D1

SYSTEM EE

PART NUMBER	ALTERNATE FOR PART NUMBER	BOM OPTION	REF DES	COMMENTS:	
376S1080	376S0820	ALT_CMN	ALL	<RDAR://42561814>	ON SEMI PRIMARY, DIODES ALT XSTR,FET,DUAL COMP,20V,220/200MA,SOT963
353S01505	353S01389	ALT_CMN	ALL	<RDAR://42641759>	TI PRIMARY, ON SEMI ALT IC INA210A,CURRENT SENSE,200V/V,QFN10
353S01041	353S01042	ALT_CMN	ALL	<RDAR://42672116>	TI PRIMARY, ST MICRO ALT IC,REF3312,V-REF,1.25V,0.15%,5MA,QFN8
376S00146	376S1061	ALT_CMN	ALL	<RDAR://42560905>	DIODES PRIMARY, ROHM ALT XSTR,FET,P-CH,30V,400MA,ENH MODE,SOT883
371S00190	371S00085	ALT_CMN	ALL	<RDAR://42639806>	ON SEMI PRIMARY, DIODES ALT DIODE SCHOTTKY,40V,2A,LOW VF,0603
353S00750	353S00877	ALT_CMN	ALL	<RDAR://42677730>	ON SEMI PRIMARY, TI ALT IC,NCP160,LDO REG,1.8V,0.25A,XDFN5
353S01506	353S01404	ALT_CMN	ALL	<RDAR://42641429>	TI PRIMARY, ON SEMI ALT IC,INA214A,CURRENT SENSE,100V/V,QFN10
335S00213	335S0888	ALT_CMN	ALL	<RDAR://43152541>	ST PRIMARY, ON SEMI ALT IC,SERIAL I2C EEPROM,128KBIT,8P,MLP8
353S00636	353S4037	ALT_CMN	ALL	<RDAR://42639994>	DIODES PRIMARY, NXP ALT IC,PI3USB102E,DIFF.USB SW,SPDT,TQFN-10
377S00060	377S0183	ALT_CMN	ALL	<RDAR://56761205>	INFINEON PRIMARY, STM ALT TVS,DIODE,BIDIR,1LINE,22V,11.5PF,0201
353S00878	353S00599	ALT_CMN	ALL	<RDAR://43151782>	ON SEMI PRIMARY, TI ALT IC,NCP160,LDO REG,3.0V,0.25A,DFN4
311S00138	311S0436	ALT_CMN	ALL	<RDAR://43152801>	TI PRIMARY, NXP ALT IC,74AVC4T245,4BIT VOLT TRANSLATOR,QFP16
311S00060	311S0273	ALT_CMN	ALL	<RDAR://43153429>	PHILLIPS PRIMARY, DIODES ALT IC,74LVC1G32,SNGL 2-INPT OR GATE,SOT891
353S4376	353S3384	ALT_CMN	ALL	<RDAR://43953240>	TI PRIMARY, ON SEMI ALT IC,LMV331,COMP,OPEN COL,2.7V,60UA,SC70
311S0426	311S00007	ALT_CMN	ALL	<RDAR://43955202>	DIODES PRIMARY, NXP ALT IC,74LVC1G07,SNGL BFR W/OD OUT,DFN,6P
311S00192	311S00191	ALT_CMN	ALL	<RDAR://43955903>	DIODES PRIMARY, NEXPERIA ALT IC,74LVC1G07,SNGL BFR W/OD OUT,DFN,6P
107S0211	107S0210	ALT_CMN	ALL	<RDAR://44198222>	ROHM PRIMARY, VISHAY ALT RES,MTL,.005 OHM,1%,1W,1206
335S00270	335S00203	ALT_CMN	ALL	<RDAR://43152675>	MACRONIX PRIMARY, ADESTO ALT IC,FLASH,SERIAL,SPI,4MX8,1.8V,4X3MM,DFN8
138S00086	138S0884	ALT_CMN	ALL	<RDAR://44320169>	MURATA PRIMARY, TAIYO ALT CAP,CER,X5R,20UF,20%,6.3V,0402,H=0.7MM
138S0714	138S0713	ALT_CMN	ALL	<RDAR://44325434>	MURATA PRIMARY, SAMSUNG ALT CAP,CER,10UF,6.3V,X5R,0.7MM,0402,SAMSUNG
138S0715	138S0732	ALT_CMN	ALL	<RDAR://44325464>	MURATA PRIMARY, SAMSUNG ALT CAP,CER,X5R,1UF,10%,10V,0402,MURATA
138S00111	138S00036	ALT_CMN	ALL	<RDAR://44325659>	MURATA PRIMARY, TAIYO YUDEN ALT CAP,CER,20UF,20%,2.5V,X6S,LOW NOISE,0402
132S00176	132S0640	ALT_CMN	ALL	<RDAR://44325857>	MURATA PRIMARY, YAGEO ALT CAP,CER,0.047UH,10%,50V,X7R,0402
311S0596	311S0593	ALT_CMN	ALL	<RDAR://44345963>	NXP PRIMARY, TI ALT IC,VOLT-LEVEL TRANS,W/CONFIG GATE,SOT886
311S00156	311S00129	ALT_CMN	ALL	<RDAR://44347874>	TI PRIMARY, NEXPERIA ALT IC,XCVR,BUS,4-BIT,DL SPPLY,3-OUT,UQFN16
311S00013	311S0508	ALT_CMN	ALL	<RDAR://44348000>	NEXPERIA PRIMARY, DIODES ALT IC,74AUP1G07,SNGL BUFFER W/OD OUT,SOT891
152S00434	152S1829	ALT_CMN	ALL	<RDAR://44363291>	TDK PRIMARY, CYNTEC ALT IND,PWR,MULT,1UH,20%,0.4A,0.636 OHM,0402
155S00166	155S0391	ALT_CMN	ALL	<RDAR://44364823>	MURATA PRIMARY, TDK ALT FERR BD,220 OHM,25%,700MA,0.28 DCR,0402
155S0660	155S0513	ALT_CMN	ALL	<RDAR://44364960>	TDK PRIMARY, MURATA ALT FERR BD,22 OHM,25%,1A,55 MOHM DCR,0201
155S00018	155S0664	ALT_CMN	ALL	<RDAR://44365105>	MURATA PRIMARY, TAIYO ALT FERR BD,80 OHM,25%,500MA,0.18 DCR,0201
155S00007	155S0667	ALT_CMN	ALL	<RDAR://44365462>	PANASONIC PRIMARY, TAIYO ALT FLTR,COMMON MODE,90 OHM,100MA,0202
311S0562	311S0372	ALT_CMN	ALL	<RDAR://43153066>	NXP PRIMARY, TI ALT IC,VOLT-LEVEL TRANS,W/CONFIG GATE,SOT891
138S00117	138S00071	ALT_CMN	ALL	<RDAR://44325102>	MURATA PRIMARY, KYOCERA ALT CAP,CER,X5R,4UF,20%,6.3V,0201,T=0.55MM
155S0914	155S0897	ALT_CMN	ALL	<RDAR://44391467>	TDK PRIMARY, PANASONIC ALT FLTR,NOISE,2.4GHZ,0.1A,0.65X0.5MM,SMD4
155S00190	155S0897	ALT_CMN	ALL	<RDAR://44391467>	TDK PRIMARY, TAIYO YUDEN ALT FLTR,NOISE,2.4GHZ,0.1A,0.65X0.5MM,SMD4
197S00053	197S00050	ALT_CMN	ALL	<RDAR://44391613>	TXC PRIMARY, KYOCERA ALT XTAL,24MHZ,10PPM,8PF,40 OHM,2520
197S00054	197S00050	ALT_CMN	ALL	<RDAR://44391613>	TXC PRIMARY, NDK ALT XTAL,24MHZ,10PPM,8PF,40 OHM,2520
377S00079	377S00077	ALT_CMN	ALL	<RDAR://44391888>	ST MICRO PRIMARY, DIODES ALT TVS,DIODE,UNIDIR,22V,35A,1.6X1.0
377S0077	377S0183	ALT_CMN	ALL	<RDAR://44392851>	INFINEON PRIMARY, ST ALT SUPPR,TRANS,BIDIR,5.5V,6.2PF,0201
311S0271	311S00008	ALT_CMN	ALL	<RDAR://43955521>	DIODES PRIMARY, NXP ALT IC,74LVC1G08,SNGL 2-INPT AND GATE,DFN,6P

155S0694	155S0387	ALT_CMN	ALL	<RDAR://44363691>	TDK PRIMARY, MURATA ALT FERRITE BEAD,470OHM,0.1A,1.5MOHM DCR,060
138S1103	138S0719	ALT_CMN	ALL	<RDAR://44325533>	MURATA PRIMARY, TY ALT CAP,CER,X5R,4.7UF,20%,10V,0402,MURATA
138S0660	138S0684	ALT_CMN	ALL	<RDAR://44325201>	MURATA PRIMARY, TAIYO ALT CAP,CER,10UF,20%,10V,X5R,0603,MURATA
311S00104	311S00091	ALT_CMN	ALL	<RDAR://44346512>	ON SEMI PRIMARY, TI ALT IC,NLSX4402,2BIT DUAL LEVEL XLATOR,DFN8
107S00016	107S0118	ALT_CMN	ALL	<RDAR://44358912>	VISHAY PRIMARY, ROHM ALT RES,FILM,0.001 OHM,1W,1%,1206
138S0914	138S00109	ALT_CMN	ALL	<RDAR://44363107>	KYOCERA PRIMARY, MURATA ALT CAP,X5R,2.2UF,20%,6.3V,0201,0.35MM,KYO
138S00049	138S0831	ALT_CMN	ALL	<RDAR://44621837>	MURATA PRIMARY, KYOCERA ALT CAP,CER,X5R,2.2UF,20%,6.3V,0201
103S00250	103S00249	ALT_CMN	ALL	<RDAR://44623255>	MURATA PRIMARY, YAGEO ALT RES,TK,18.2 KOHM,0.1%,TOPPM,1/20W,0201
103S00248	103S00247	ALT_CMN	ALL	<RDAR://44623345>	CYNTEC PRIMARY, YAGEO ALT RES,TK,8.06 KOHM,0.1%,50PPM,1/20W,0201
376S1137	376S00019	ALT_CMN	ALL	<RDAR://44620634>	DIODES PRIMARY, VISHAY ALT XSTR,FET,N-CH,20V,4.5A,40MOHM,BGA4
138S0750	138S00097	ALT_CMN	ALL	<RDAR://44622531>	TAYIO YUDEN PRIMARY, MURATA ALT CAP,CER,4.7UF,20%,6.3V,X6S,TY,0402

353S01346	353S01320	ALT_CMN	ALL	<RDAR://43953321>	NXP PRIMARY, ONSEMI ALT IC,NX3DV642,3-LANE HS SW,TPDT,XQFN24
197S00048	197S00036	ALT_CMN	ALL	<RDAR://44391564>	TXC PRIMARY, KYOCERA ALT XTAL,25MHZ,25PPM,20PF,50OHM,500UW,2016
376S00332	376S00074	ALT_CMN	ALL	<RDAR://44620855>	TOSHIBA PRIMARY, NEXPERIA ALT MOSFET,DUAL N-CH30V,100MA,6P SOT563
740S00028	740S0118	ALT_CMN	ALL	<RDAR://44393058>	POLYTRONICS PRIMARY, BUSSMAN ALT FUSE,12A,32V,1206,FAST ACTING,SMD
138S00056	138S1100	ALT_CMN	ALL	<RDAR://44319895>	MURATA PRIMARY, TAIYO ALT CAP,CER,3-TERM,9.1UF,20%,4V,H0.7MM,0402
155S0665	155S00232	ALT_CMN	ALL	<RDAR://44363532>	TDK PRIMARY, MURATA ALT FERR BD,120 OHMZ,25%,480MA,0.21 OHM,0201
197S00120	197S00118	ALT_CMN	ALL	<RDAR://44391668>	TXC PRIMARY, EPSON ALT XTAL,24MHZ,30PPM,9.5PF,60 OHM MAX,1612
311S00133	311S00130	ALT_CMN	ALL	<RDAR://44396487>	NXP PRIMARY, DIODES ALT IC,74AVC1T45,XCVR,DL SUPPLY,1BIT,SON-6
107S00086	107S00056	ALT_CMN	ALL	<RDAR://44358149>	CYNTEC PRIMARY, TFT ALT RES,SENSE,0.003 OHM,1%,1/2W,0306-4T
311S00121	311S0398	ALT_CMN	ALL	<RDAR://43152868>	NXP PRIMARY, DIODES ALT IC,74AUP1G08,2-INPUT AND GATE,SOT891
107S00100	107S00057	ALT_CMN	ALL	<RDAR://44358232>	CYNTEC PRIMARY, TFT ALT RES,MF,0.002 OHM,1%,1/2W,0306-4T
107S00033	107S00034	ALT_CMN	ALL	<RDAR://44349741>	CYNTEC PRIMARY, TFT ALT RES,MF,0.025 OHM,1%,0612-4T,BLK

SYSTEM EE

PART NUMBER	ALTERNATE FOR PART NUMBER	BOM OPTION	REF DES	COMMENTS:	
155S00067	155S00401	ALT_CMN	ALL	<RDAR://44653410>	MURATA PRIMARY, TDK ALT FERR BD,240 OHM,25%,350MA,0.38 DCR,0201
138S0706	138S0739	ALT_CMN	ALL	<RDAR://44621676>	SAMSUNG PRIMARY, MURATA ALT CAP,CER,X5R,1UF,20%,10V,0201,SAMSUNG
138S0945	138S0739	ALT_CMN	ALL	<RDAR://44621676>	SAMSUNG PRIMARY, KYOCERA ALT CAP,CER,X5R,1UF,20%,10V,0201,SAMSUNG
152S00864	152S00851	ALT_CMN	ALL	<RDAR://44652690>	TDK PRIMARY, CYNTEC ALT IND,MULT,1.2UH,20%,120MA,1.17 OHM,0402
138S00181	138S0835	ALT_CMN	ALL	<RDAR://44621938>	MURATA PRIMARY, SAMSUNG ALT CAP,CER,3-TERM,4.3UF,20%,4V,0402
371S00185	371S00193	ALT_CMN	ALL	<RDAR://44610883>	ROHM PRIMARY, TOSHIBA ALT DIODE,SCHOTTKY,30V,100MA,0201
311S00196	311S00195	ALT_CMN	ALL	<RDAR://46735900>	DIODES PRIMARY, NEXPERIA ALT IC,74LVC1G08,SNGL 2-INPT AND G,DFN1410-6
377S00123	377S00031	ALT_CMN	ALL	<RDAR://44391823>	ON SEMI PRIMARY, SEMTECH ALT DIODE,TVS,5.5V,7.3VBR,0.2PF,0201
376S00292	376S00294	ALT_CMN	ALL	<RDAR://43910260>	DIODES PRIMARY, NEXPERIA ALT NFET,20V,1.35A,0.18 OHM,DFN3
107S00346	107S00116	ALT_CMN	ALL	<RDAR://46676880>	CYNTEC PRIMARY, YAGEO ALT RES,MF,0.10 OHM,1%,0.5W,150PPM,0603-4T
311S0525	311S0532	ALT_CMN	ALL	<RDAR://48407305>	TI PRIMARY, NXP ALT IC,SNGL 3-STATE BUFFER,6-PIN,DFN
116S00007	116S00006	ALT_CMN	ALL	<RDAR://48412393>	YAGEO PRIMARY, VISHAY ALT RES,MTL FILM,0 OHM,TIGHT TOL,3A,0402
107S0284	107S00021	ALT_CMN	ALL	<RDAR://48411982>	CYNTEC PRIMARY, TFT ALT RES,SENSE,0.020 OHM,1%,1/3W,0306-4T
107S0276	107S00020	ALT_CMN	ALL	<RDAR://48407669>	TAGEO PRIMARY, TFT ALT RES,SENSE,0.010 OHM,1/3W,4-TERM,1%,0306
132S00229	132S00010	ALT_CMN	ALL	<RDAR://53023881>	MURATA PRIMARY, TAIYO ALT CAP,CER,X5R,0.1UF,10%,35V,0201
377S00166	377S00106	ALT_CMN	ALL	<RDAR://53024719>	ONSIME PRIMARY, SEMTECH ALT TVS,DIODE,1VRWM,2.3VBR,0.2PF,0201
107S00101	107S00005	ALT_CMN	ALL	<RDAR://53024863>	YAGEO PRIMARY, CYNTEC ALT RES,SENSE,0.005OHM,1/3W,1%,100PPM,0306
138S0852	138S0818	ALT_CMN	ALL	<RDAR://53109945>	MURATA PRIMARY, SAMSUNG ALT CAP;CER,0.68UF,5%,6.3V,X6S,0402
152S00812	152S1701	ALT_CMN	ALL	<RDAR://53229916>	CYNTEC PRIMARY, CHILISIN ALT IND;PWR,10UH,20%,1.6A,150MOHM,4040X1.8MM
138S00087	138S1086	ALT_CMN	ALL	<RDAR://53229099>	MURATA PRIMARY, TAIYO ALT CAP,X5R,2.2UF,10%,50V,0603
353S01615	353S4160	ALT_CMN	ALL	<RDAR://53453766>	TI-MAINE PRIMARY, TI-AIZU ALT IC,LP8548B1-04,DC/DC CVTR,BOOST,QFN24
107S00297	107S00344	ALT_CMN	ALL	<RDAR://56910244>	MURATA PRIMARY, MURATA ALT THERMISTOR,NTC,100KOHM,1%,0.10MA,0201

H9M

PART NUMBER	ALTERNATE FOR PART NUMBER	BOM OPTION	REF DES	COMMENTS:	
339S00387	339S00386	ALT_CMN	ALL	<RDAR://41988491>	MICRON SCK PRIMARY, HYNIX SCK ALT POP,GIBRALTAR+1GB,20NM,M,DEV,SCK,CSP1122
339S00390	339S00386	ALT_CMN	ALL	<RDAR://41988491>	MICRON SCK PRIMARY, MICRON ATK ALT POP,GIBRALTAR+1GB,20NM,M,DEV,SCK,CSP1122
339S00391	339S00386	ALT_CMN	ALL	<RDAR://41988491>	MICRON SCK PRIMARY, HYNIX ATK ALT POP,GIBRALTAR+1GB,20NM,M,DEV,SCK,CSP1122
339S00389	339S00388	ALT_CMN	ALL	<RDAR://41988491>	MICRON SCK PRIMARY, HYNIX SCK ALT POP,GIBRALTAR+2GB,20NM,M,DEV,SCK,CSP1122
339S00392	339S00388	ALT_CMN	ALL	<RDAR://41988491>	MICRON SCK PRIMARY, MICRON ATK ALT POP,GIBRALTAR+2GB,20NM,M,DEV,SCK,CSP1122
339S00393	339S00388	ALT_CMN	ALL	<RDAR://41988491>	MICRON SCK PRIMARY, HYNIX ATK ALT POP,GIBRALTAR+2GB,20NM,M,DEV,SCK,CSP1122
339S00602	339S00601	ALT_CMN	ALL	<RDAR://41988491>	MICRON SCK PRIMARY, HYNIX SCK ALT POP,GIBRALTAR_L+1GB,16NM,M,B0,SCK,C1122
339S00603	339S00601	ALT_CMN	ALL	<RDAR://41988491>	MICRON SCK PRIMARY, MICRON ATK ALT POP,GIBRALTAR_L+1GB,16NM,M,B0,SCK,C1122
339S00604	339S00601	ALT_CMN	ALL	<RDAR://41988491>	MICRON SCK PRIMARY, HYNIX ATK ALT POP,GIBRALTAR_L+1GB,16NM,M,B0,SCK,C1122
339S00606	339S00605	ALT_CMN	ALL	<RDAR://41988491>	MICRON SCK PRIMARY, HYNIX SCK ALT POP,GIBRALTAR_L+2GB,16NM,M,B0,SCK,C1122
339S00607	339S00605	ALT_CMN	ALL	<RDAR://41988491>	MICRON SCK PRIMARY, MICRON ATK ALT POP,GIBRALTAR_L+2GB,16NM,M,B0,SCK,C1122
339S00608	339S00605	ALT_CMN	ALL	<RDAR://41988491>	MICRON SCK PRIMARY, HYNIX ATK ALT POP,GIBRALTAR_L+2GB,16NM,M,B0,SCK,C1122

BACKLIGHT

PART NUMBER	ALTERNATE FOR PART NUMBER	BOM OPTION	REF DES	COMMENTS:	
138S0738	138S1101	ALT_CMN	ALL	<RDAR://42360480>	MURATA PRIMARY, SAMSUNG ALT CAP,CER,2.2UF,10%,100V,X5R,1206,T:0.95MM
138S0846	138S0811	ALT_CMN	ALL	<RDAR://42360480>	MURATA PRIMARY, SAMSUNG ALT CAP,CER,4.7UF,10%,25V,X6S,0603
376S1053	376S0604	ALT_CMN	ALL	<RDAR://42360480>	FAIRCHILD PRIMARY, DIODES ALT XSTR,FET,P-CH,20V,4.5A,0.043 OHM,SS0T6
152S00359	152S00253	ALT_CMN	ALL	<RDAR://42360480>	CYNTEC PRIMARY, CHILISIN ALT IND,PWR,MLD,15UH,20%,1.9A,240MO,7368X24M
740S00041	740S0159	ALT_CMN	ALL	<RDAR://42360480>	LITTLEFUSE PRIMARY, BOURNS ALT FUSE,HIGH INRUSH,32V,3A,0603
371S00077	371S00180	ALT_CMN	ALL	<RDAR://42360480>	DIOES PRIMARY, NXP ALT DIODE,SCHOTTKY,100V,2A,SOD123
376S1106	376S0678	ALT_CMN	ALL	<RDAR://42360480>	VISHAY PRIMARY, FAIRCHILD ALT XSTR,MSFT,N-CH,75V,16A,0.046 OHM
371S00217	371S00079	ALT_CMN	ALL	<RDAR://53230880>	NXP PRIMARY, ROHM ALT DIODE,SCHOTKY,60V,1A,SOD123

WIFI

PART NUMBER	ALTERNATE FOR PART NUMBER	BOM OPTION	REF DES	COMMENTS:	
339S00632	339S00616	ALT_CMN	ALL	<RDAR://46651871>	MURATA PRIMARY, USI ALT MODULE,WIFI/BT,SAPPORO,ES3.1,M,LGA451

AUDIO

PART NUMBER	ALTERNATE FOR PART NUMBER	BOM OPTION	REF DES	COMMENTS:	
128S00009	128S00093	ALT_CMN	ALL	<RDAR://53110517>	TOKIN PRIMARY, KEMET ALT CAP TANT POLY,33UF,20%,16V,55MO,1.6A,B12
128S00103	128S00093	ALT_CMN	ALL	<RDAR://53110517>	TOKIN PRIMARY, SEMCO ALT CAP TANT POLY,33UF,20%,16V,55MO,1.6A,B12
155S00034	155S0706	ALT_CMN	ALL	<RDAR://53110248>	TAIYO PRIMARY, MURATA ALT FERR BD,120OHM,25%,1.3A,0.07DCR,0402

SYNC_DATE=

SYNC_MASTER=

www.haojiyoubbs.com
QQ微信：181806465

RULER_RULE_SET=RIGID_2016 — MANUFACTURING CONFIGURATION — TABLE_REV_NUMBER=1

DIELECTRIC BASED SPACING RULES				DEFAULT SPACING MULTIPLES	VOID SPACE RATIO
MULTIPLES	SMDPIN MAX(UM)	MVIA MAX(UM)	SMDPIN2SMDPIN MAX(UM)		
1,2,3,4,5,6,7,8,9,10,11,12,13,14	120	120	100	1	2

	LAYERS	MINIMUM CU WIDTH RATIO	MINIMUM CU SPACING RATIO	MINIMUM TO DEFAULT RATIO
SIGNAL 1/3 OZ, PLATED TO 0.031 MM	TOP,BOTTOM	2.0	2.36842	1.2
GND PLANE 1/3 OZ, PLATED TO 0.020 MM	ISL2,ISL13	2.25	2.5	1.2
SIGNAL 1/3 OZ, PLATED TO 0.030 MM	ISL3,ISL12	2.0	2.25806	1.2
GND PLANE 1/2 OZ, 0.016 MM	ISL4,ISL11	2.5	2.5	1.2
SIGNAL 1/2 OZ, 0.016 MM	ISL5,ISL10	2.5	2.5	1.2
GND PLANE 1/2 OZ, 0.016 MM	ISL6,ISL9	2.5	2.5	1.2
POWER PLANE 1 OZ, 0.031 MM	ISL7,ISL8	2.0	2.25806	1.2

MANUAL EDITS AFTER AUTOGENERATION:
OVERWROTE THROUGH VIA, BB VIA, AND UVIA SPACINGS TO DEFAULT VALUE, THE AUTOGEN ONES ARE TOO HIGH
UPDATE SAME NET SPACING FOR VIA TO HOLE, UVIA TO SMD PIN, FOR DEFAULT AND MIN, TO -1
CHANGED LINE TO SMD SAME NET SPACING FROM 0.1 TO 0.07 ON TOP/BOTTOM LAYERS
CHANGED MAX NECK LENGTH FOR THE DEFAULT PHYSICAL RULE TO 20MM
CHANGED UVIA TO LINE SAME NET SPACING TO 0.05
CHANGED BB VIA TO LINE, ABD BB VIA TO BB VIA SAME NET SPACING TO 0.0
CHANGED BB VIA TO UVIA SAME NET SPACING TO -1
CHANGED LINE TO SHAPE SAME NET SPACING TO 0.05
SET BB VIA STAGGER IN PHYSICAL RULES TO 0.2500 FOR MIN, 0.275 FOR ALL OTHER, FOR LAYERS 3 AND 12
COPIED THE RULES FROM 85 OHM DIFF TO 85 MIN STAGGER
SET ENABLE DRC BY LAYER IN SAME NET SPACING TO TRUE FOR ALL LAYERS
KEEP DEFAULT AS DEFAULT, GENERIC DP AS GENERIC DP
REPLACING ALL SPACINGS EXCEPT LINE TO LINE WITH DEFAULT VALUES
DECREASED NECK GAP FOR DIFF PAIRS TO VALUE FOR GENERIC DP
REASSIGN SPACING AND PHYSICAL REGION RULES AND NET CLASS ASSIGNMENTS
SET UVIA TO SHAPE SAME NET SPACING TO 0.1MM ON TOP/BOTTOM

SYNC_MASTER= SYNC_DATE=
PAGE TITLE: BOARD RULES
Apple Inc.
DRAWING NUMBER 051-05309 SIZE D
REVISION 5.1.0
BRANCH
PAGE 500 OF 500
SHEET 98 OF 98

NOTICE OF PROPRIETARY PROPERTY:
THE INFORMATION CONTAINED HEREIN IS THE PROPRIETARY PROPERTY OF APPLE INC.
THE POSESSOR AGREES TO THE FOLLOWING:
I TO MAINTAIN THIS DOCUMENT IN CONFIDENCE
II NOT TO REPRODUCE OR COPY IT
III NOT TO REVEAL OR PUBLISH IT IN WHOLE OR PART
IV ALL RIGHTS RESERVED

www.haojiyoubbs.com
QQ微信：181806465